Nominal data

Type	3800	
Phase		1~
Nominal voltage	VAC	115
Frequency	Hz	60
Speed	min^{-1}	1900
Power input	W	8.0
Min. ambient temperature	°C	-10
Max. ambient temperature	°C	80
Air flow	m^3/h	54
Sound power level	B	3.9
Sound pressure level	dB(A)	26

ml = Max. load · me = Max. efficiency · fa = Running at free air · cs = Customer specs · cu = Customer unit
Subject to alterations

AC axial compact fan

Technical features

Mass	0.420 kg
Dimensions	92 x 92 x 38 mm
Material of impeller	Sheet steel, coated in black
Housing material	Die-cast aluminium
Direction of air flow	Exhaust over struts
Direction of rotation	Right, looking at rotor
Bearing	Sintec sleeve bearing
Lifetime L10 at 40 °C	62500 h
Lifetime L10 at maximum temperature	25000 h
Connection line	With 2 single strands AWG 18, TR 64 Grounding lug M4 x 8
Motor protection	Protected from overload using impedance protection
Approval	VDE, CSA, UL, CE

AC axial compact fan

Product drawing

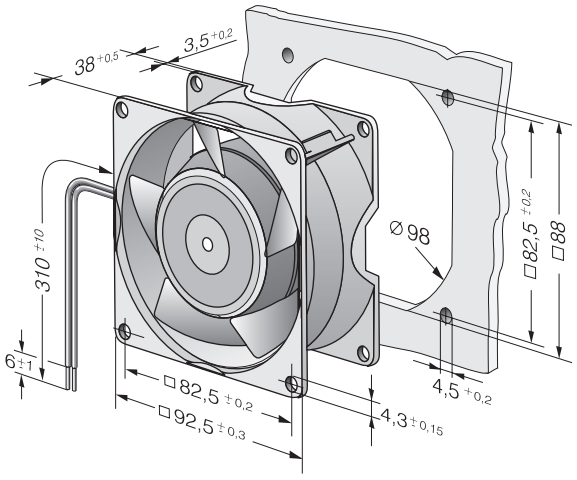

AC axial compact fan
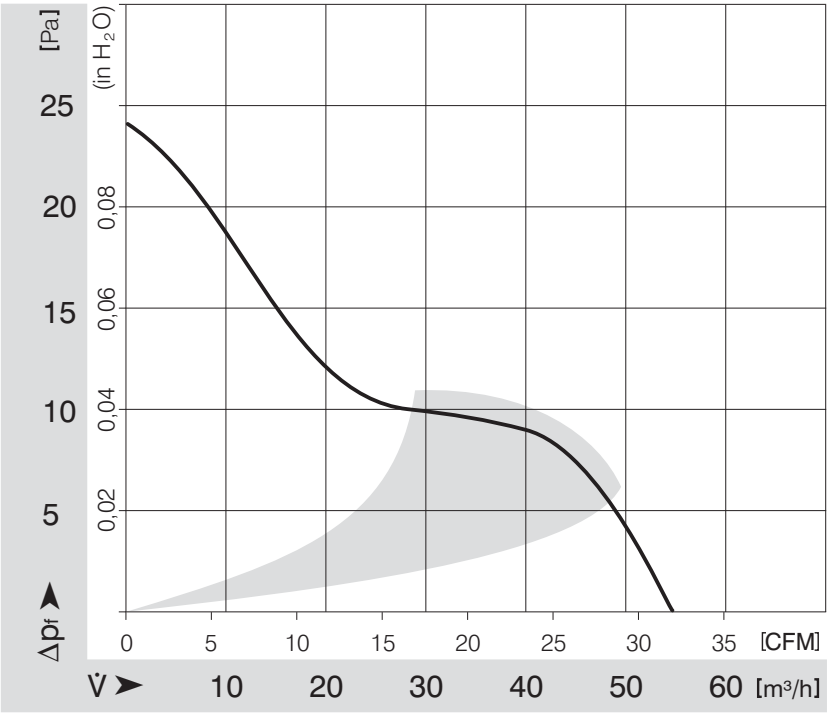
Charts: Air flow