Standard
sine wave output, highly interpolable, optical | Sendix 5814 / 5834 (shaft / hollow shaft) | SinCos

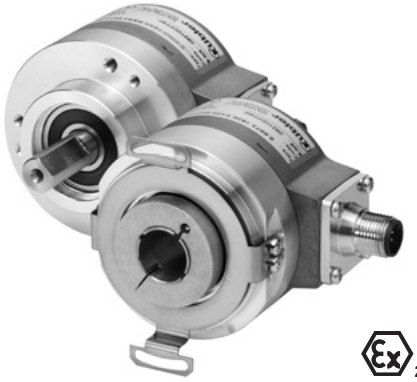

The incremental encoders Sendix 5814 and 5834 with SinCos interface are particularly suited for applications in the field of drive technology.

Thanks to their high signal quality, they are optimally suited for further interpolation.

Ex 2/22 | c UL us | RoHS

Safety-Lock™ | High rotational speed | Temperature range | High protection level | High shaft load capacity | Shock / vibration resistant | Magnetic field proof | Reverse polarity protection | SinCos | Optical sensor | Surface protection salt spray-tested optional

Powerful

- With incremental SinCos tracks.
- Very high signal quality.
- Suited for motor feedback applications.

Flexible

- Shaft and hollow shaft versions.
- Cable and connector variants.
- Various mounting options available.

Order code Shaft version

8.5814	.	1	2	X	X	.	XXXX
Type		a	b	c	d		e

If for each parameter of an encoder the **underlined preferred option** is selected, then the delivery time will be 10 working days for a maximum of 10 pieces. Qts. up to 50 pcs. of these types generally have a delivery time of 15 working days.

10 by 10

a *Flange*
1 = clamping flange, IP65, ø 58 mm [2.28"]

b *Shaft (ø x L)*
2 = 10 x 20 mm [0.39 x 0.79"], with flat

c *Output circuit / power supply*
1 = SinCos / 5 V DC
2 = SinCos / 10 ... 30 V DC

d *Type of connection*
1 = axial cable, 1 m [3.28'] PVC
A = axial cable, special length PVC *)
2 = radial cable, 1 m [3.28'] PVC
B = radial cable, special length PVC *)
5 = axial M12 connector, 8 pin
6 = radial M12 connector, 8 pin

*) Available special lengths (connection types A, B):
2, 3, 5, 8, 10, 15 m [6.56, 9.84, 16.40, 26.25, 32.80, 49.21']
order code expansion .XXXX = length in dm
ex.: 8.5814.122A.2048.0030 (for cable length 3 m)

e *Pulse rate*
1024, **2048**

Optional on request
- Ex 2/22 [1)]
- surface protection salt spray tested

Order code Hollow shaft

8.5834	.	X	X	X	X	.	XXXX
Type		a	b	c	d		e

If for each parameter of an encoder the **underlined preferred option** is selected, then the delivery time will be 10 working days for a maximum of 10 pieces. Qts. up to 50 pcs. of these types generally have a delivery time of 15 working days.

10 by 10

a *Flange*
1 = with spring element, long, IP65
5 = with stator coupling, IP65, ø 63 mm [2.48"]

b *Hollow shaft*
3 = ø 10 mm [0.39"]
K = ø 10 mm [0.39"], tapered shaft
4 = ø 12 mm [0.47"]
5 = ø 14 mm [0.55"]
6 = ø 15 mm [0.59"]
8 = ø 3/8"
9 = ø 1/2"

c *Output circuit / power supply*
1 = SinCos / 5 V DC
2 = SinCos / 10 ... 30 V DC

d *Type of connection*
2 = radial cable, 1 m [3.28'] PVC
B = radial cable, special length PVC *)
E = tangential cable, 1 m [3.28'] PVC
F = tangential cable, special length PVC *)
6 = radial M12 connector, 8 pin

*) Available special lengths (connection types B, F):
2, 3, 5, 8, 10, 15 m [6.56, 9.84, 16.40, 26.25, 32.80, 49.21']
order code expansion .XXXX = length in dm
ex.: 8.5834.142B.2048.0030 (for cable length 3 m)

e *Pulse rate*
1024, **2048**

Optional on request
- Ex 2/22
  (not for type of connection E, F) [1)]
- surface protection salt spray tested

1) For the cable connection type, cable material PUR.

© Fritz Kübler GmbH, subject to errors and changes. 04/2016

Standard sine wave output, highly interpolable, optical	Sendix 5814 / 5834 (shaft / hollow shaft)	SinCos

Connection technology		Order no.
Connector, self-assembly (straight)	M12 female connector with coupling nut	**05.CMB 8181-0**
Cordset, pre-assembled	M12 female connector with coupling nut, 2 m [6.56'] PVC cable	**05.00.6041.8211.002M**

Further accessories can be found in the accessories section or in the accessories area of our website at: www.kuebler.com/accessories.
Additional connectors can be found in the connection technology section or in the connection technology area of our website at: www.kuebler.com/connection_technology.

Technical data

Mechanical characteristics

Maximum speed	IP65	12000 min^{-1}, 5000 min^{-1} (continuous)
	IP67	8000 min^{-1}, 2000 min^{-1} (continuous)
Starting torque – at 20°C [68°F]	IP65	< 0.01 Nm
	IP67	< 0.05 Nm
Mass moment of inertia	shaft	4.0 x 10^{-6} kgm^2
	hollow shaft	7.0 x 10^{-6} kgm^2
Load capacity of shaft	radial	80 N
	axial	40 N
Weight		approx. 0.45 kg [15.85 oz]
Protection acc. to EN 60529		
	housing side	IP67
	shaft side	IP65, opt. IP67
Working temperature range		-40°C ... +90°C [-40°F ... +194°F] 1)
Materials	shaft / hollow shaft	stainless steel
	flange	aluminium
	housing	zinc die-cast
	cable	PVC
Shock resistance acc. to EN 60068-2-27		2500 m/s^2, 6 ms
Vibration resistance acc. to EN 60068-2-6		100 m/s^2, 55 ... 2000 Hz

Electrical characteristics

Power supply		5 V DC (±5 %) or 10 ... 30 V DC
Current consumption (no load)	5 V DC	max. 70 mA
	10 ... 30 V DC	max. 45 mA
Reverse polarity protection of the power supply		yes
UL approval		file 224618
CE compliant acc. to		EMC guideline 2014/30/EU RoHS guideline 2011/65/EU

SinCos interface

Max. frequency -3dB	400 kHz
Signal level	1 Vpp (±10 %)
Short circuit proof	yes 2)
Pulse rate	1024 / 2048 ppr

Terminal assignment

Output circuit	Type of connection	Cable (isolate unused wires individually before initial start-up)							
1, 2	1, 2, A, B, E, F	Signal:	0 V	+V	A	$\overline{A}$	B	$\overline{B}$	⏚
		Cable colour:	WH	BN	GN	YE	GY	PK	shield

Output circuit	Type of connection	M12 connector, 8-pin							
1, 2	5, 6	Signal:	0 V	+V	A	$\overline{A}$	B	$\overline{B}$	⏚
		Pin:	1	2	3	4	5	6	PH 3)

+V: Encoder power supply +V DC
0 V: Encoder power supply ground GND (0 V)
A, $\overline{A}$: Cosine signal
B, $\overline{B}$: Sine signal
PH ⏚: Plug connector housing (shield)

Top view of mating side, male contact base

M12 connector, 8-pin

1) Cable version: -30°C ... + 90°C [-22°F ... +194°F] fixed installation.
2) Short circuit to 0V or to output, one channel at a time, power supply correctly applied.
3) PH = shield is attached to connector housing.

© Fritz Kübler GmbH, subject to errors and changes. 04/2016

Standard sine wave output, highly interpolable, optical	Sendix 5814 / 5834 (shaft / hollow shaft)	SinCos

Dimensions shaft version

Dimensions in mm [inch]

Clamping flange, ø 58 [2.28]
Flange type 1 with shaft type 2
(drawing with cable)

1 3 x M3, 6 [0.24] deep
2 3 x M4, 8 [0.32] deep
D =10 f7 [0.39]

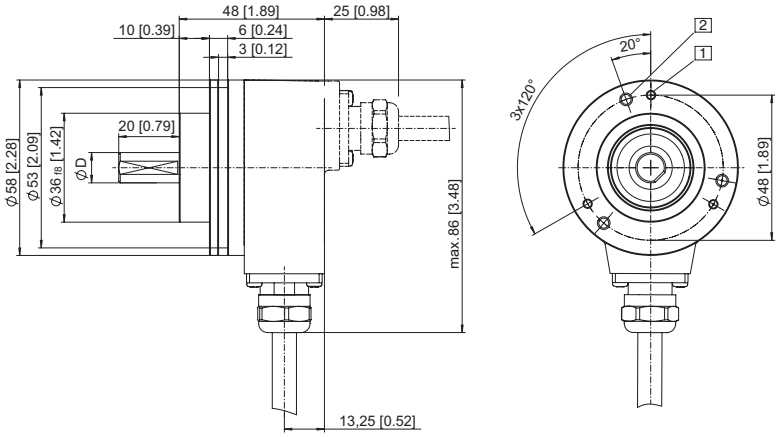

Dimensions hollow shaft version

Dimensions in mm [inch]

Flange with spring element, long
Flange type 1
(drawing with M12 connector)

1 Torque stop slot, recommendation: cylindrical pin DIN 7, ø 4 [0.16]
2 3 x M3, 5.5 [0.22] deep
3 Recommended torque for the clamping ring 0.6 Nm

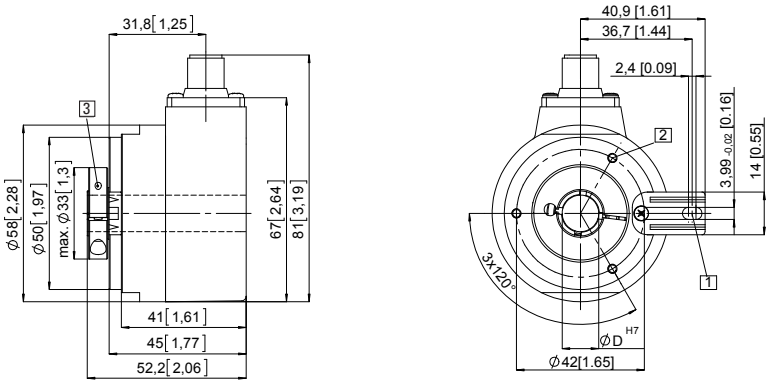

Flange with stator coupling, ø 63 [2.48] and hollow shaft
Flange type 5
(drawing with M12 connector)

1 Recommended torque for the clamping ring 0.6 Nm

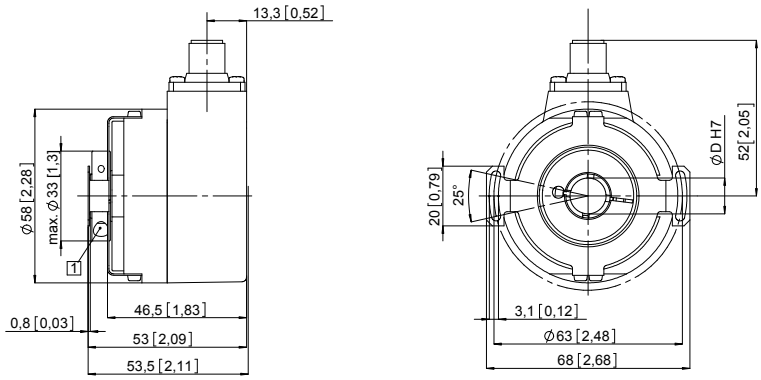

Flange with stator coupling, ø 63 [2.48] and tapered shaft
Flange type 5
(drawing with tangential cable outlet)

1 For (4x) M3 screw
2 Status LED
3 SET button

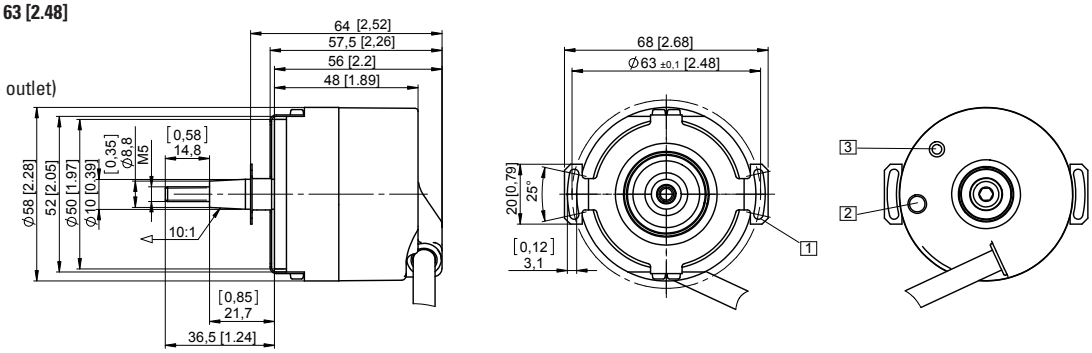

© Fritz Kübler GmbH, subject to errors and changes. 04/2016