Draw wire mechanics with encoder or analogue sensor

Draw wire encoder B80

Measuring length max. 3 m
Traverse speed max. 10 m/s

The draw wire mechanics B80 can be used up to a measuring length of 3 metres.

These draw wire mechanics may be combined with the proven Kübler Sendix encoders with incremental or absolute interface, as well as with analogue sensors.

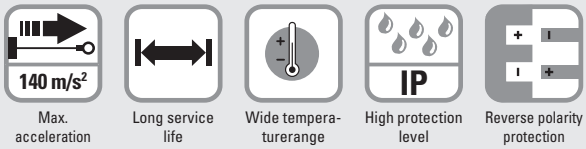

Max. acceleration | Long service life | Wide temperaturerange | High protection level | Reverse polarity protection

Robust

- The titanium-anodised aluminium housing and the stainless steel wires allow for using the mechanics even in harsh conditions.
- Wear-free wire exit thanks to special plain bearing guide.

Versatile

- High traverse speed, up to 10 m/s.
- High acceleration, up to 140 m/s².
- Quick fastening by means of 2 screws.
- Various connection possibilities available.

Order code with encoder

D8.4B1	.	XXXX	.	XX	X	X	.	XXXX
Type		ⓐ		ⓑ	ⓒ	ⓓ		ⓔ

ⓐ *Measuring range*
0100 = 1000 mm
0200 = 2000 mm
0300 = 3000 mm

ⓑ *Encoder used*
00 = Sendix incremental 5000
F3 = Sendix absolute F5863
63 = Sendix absolute 5863
F8 = Sendix absolute F5868
68 = Sendix absolute 5868

ⓒ *Output circuit*
depends on the encoder used

ⓓ *Type of connection*
depends on the encoder used

ⓔ *Resolution / Protocol / Options*
depends on the encoder used

Optional on request
- Other measuring ranges
- Cable diameter 1 mm
- Ring eye instead of cable clip
- Modified cable and/or connector orientation
- Modified cable outlet direction
- Sensor protection level IP67

Standard resolutions for draw wire with incremental encoder Sendix 5000, drum circumference 200 mm

Pulses / revolution	200	2000	4000
Pulses / mm	1	10	20
Resolution (mm)	1	0.1	0.05

Standard resolutions for draw wire with absolute encoder Sendix F5863 / F5868 or 5863 / 5868, drum circumference 200 mm

Absolute encoder	F5863 / 5863	F5868 / 5868
Pulses / revolution	2048 / 11 bits	4096, programmable via the bus / 12 bit
Pulses / mm	10.24	20.48
Resolution (mm)	-0.1	~ 0.05

Recommended standard devices

Order no. draw wire encoder	Mounted encoder	Interface	Power supply	Type of connection	Resolution / Protocol	Options
D8.4B1.XXXX.0054.2000	Sendix 5000 (8.5000.8354.2000)	PushPull with inv. signal	10 ... 30 V DC	1 x radial M12 connector	2000 ppr	no option
D8.4B1.XXXX.F324.G123	Sendix F5863 (8.F5863.1224.G123)	SSI	10 ... 30 V DC	1 x radial M23 connector	SSI-Gray-Code	Set button + Status LED
D8.4B1.XXXX.6324.G123	Sendix 5863 (8.5863.1224.G123)	SSI	10 ... 30 V DC	1 x radial M23 connector	SSI-Gray-Code	Set button + Status LED
D8.4B1.XXXX.F82E.2123	Sendix F5868 (8.F5868.122E.2123)	CANopen	10 ... 30 V DC	1 x radial M12 connector	CANopen encoder profile DS406 V3.2	Set button
D8.4B1.XXXX.6822.2123	Sendix 5868 (8.5868.1222.2123)	CANopen	10 ... 30 V DC	2 x radial M12 connector	CANopen encoder profile DS406 V3.2	Set button
D8.4B1.XXXX.6832.3113	Sendix 5868 (8.5868.1232.3113)	Profibus	10 ... 30 V DC	3 x radial M12 connector	PROFIBUS DP V0 encoder profile Class 2	Set button
D8.4B1.XXXX.68B2.B212	Sendix 5868 (8.5868.12B2.B212)	EtherCAT	10 ... 30 V DC	3 x radial M12 connector	EtherCAT with CoE 3.2.10	no option
D8.4B1.XXXX.68C2.C212	Sendix 5868 (8.5868.12C2.C212)	Profinet	10 ... 30 V DC	3 x radial M12 connector	PROFINET encoder profile version 4.1	no option

© Fritz Kübler GmbH, subject to errors and changes. 04/2016

Draw wire mechanics with encoder or analogue sensor | **Draw wire encoder B80** | **Measuring length max. 3 m Traverse speed max. 10 m/s**

Order code with analogue sensor

D8.3B1	.	XXXX	.	XXX	X	.	0000
Type		ⓐ		ⓑ	ⓒ		

ⓐ *Measuring range*
0100 = 1000 mm
0200 = 2000 mm
0300 = 3000 mm

ⓑ *Analogue sensor output / Power supply*
A11 = 4 ... 20 mA / 12 ... 30 V DC
A22 = 0 ... 10 V / 12 ... 30 V DC
A33 = potentiometer 1 kΩ / max. 30 V DC

ⓒ *Type of connection*
1 = axial cable, 2 m [6.56'] PVC
3 = M12 connector, 4-pin

Optional on request
- Other measuring ranges
- Cable diameter 1 mm
- Ring eye instead of cable clip
- Modified cable and/or connector orientation
- Modified cable outlet direction
- Sensor protection level IP67
- Increased linearity

Guide pulley for draw wire encoder

Order no.

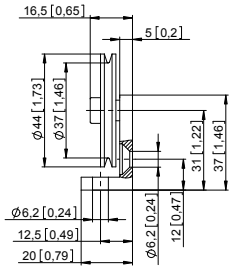

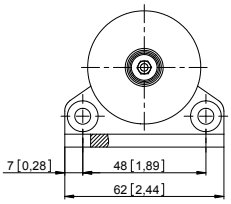

Order code for the set:
- Guide pulley (anodised aluminium)
- 2 x countersunk screws for lateral fixing
- 2 x hexagonal screws for fixing on a flat surface

8.0000.7000.0045

Connection technology for analogue sensor

		Order no.
Connector, self-assembly (straight)	M12 female connector with coupling nut	**8.0000.5116.0000**
Cordset, pre-assembled	M12 female connector with coupling nut, 2 m [6.56'] PVC cable	**05.00.6081.2211.002M**

Technical data

Mechanical characteristics (draw wire mechanics)

Measuring range		1000 mm	2000 mm	3000 mm
Extension force	F_{min}	6.9 N	6.4 N	6.9 N
	F_{max}	8.3 N	7.8 N	9.8 N
Max. speed		10 m/s	10 m/s	10 m/s
Max. acceleration		140 m/s²	140 m/s²	140 m/s²
Linearity (of the measuring range)				
analogue output		±0.15 %	±0.1 %	±0.1 %
with encoder		±0.05 %	±0.05 %	±0.05 %
Weight		approx. 750 g [26.45 oz] (dep. on the sensor/encoder used)		
Material	housing	titanium-anodised aluminium		
	wire	stainless steel ø 0.5 mm (ø 1 mm can be supplied as a special up to measuring range 1500 mm)		
Protection acc. to EN 60529		IP65 (sensor)		

Electrical characteristics (digital output)

The electrical characteristics of the draw wire mechanics with digital output can be found in the data sheets of the encoders.

Operating principle

Construction
The core of a draw wire device is a drum mounted on bearings, onto which a wire is wound. Winding takes place via a spring-loaded device.

Note
Exceeding the maximum extension length of the draw wire will lead to damage to the wire and the mechanics.

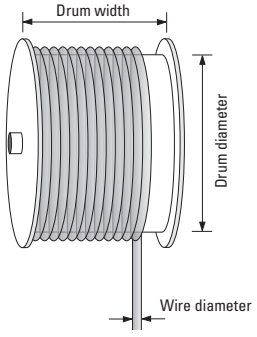

Electrical characteristics (analogue output)

Analogue output	**0 ... 10 V**	**4 ... 20 mA**	**Potentiometer**
Output	0 ... 10 V / galv. isolated, 4 conductors	4 ... 20 mA / 2 conductors	1 kΩ
Power supply	12 ... 30 V DC	12 ... 30 V DC	max. 30 V DC
Recommended slider current	–	–	< 1 µA
Max. current consumption	22.5 mA (no load)	50 mA	–
Reverse polarity protection	yes	yes	–
Working temperature	-20°C ... +60°C [-4°F ... +140°F]	-20°C ... +60°C [-4°F ... +140°F]	-20°C ... +85°C [-4°F ... +185°F]
Connection diagrams	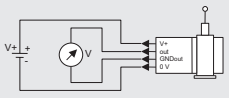	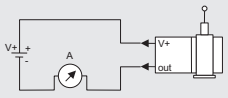	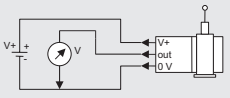
CE compliant acc. to	EMC guideline 2014/30/EU RoHS guideline 2011/65/EU		

© Fritz Kübler GmbH, subject to errors and changes. 04/2016

Draw wire mechanics with encoder or analogue sensor | **Draw wire encoder B80** | **Measuring length max. 3 m, Traverse speed max. 10 m/s**

Terminal assignment (analogue output)

Pin	1	2	3	4
Cable colour	BN	WH	BU	BK
0 ... 10 V	+V	Signal	0 V	0 V Sig.
4 ... 20 mA	+V	n. c.	Signal	n. c.
1 kΩ	+V	Slider	0 V	n. c.

Connector (analogue output)

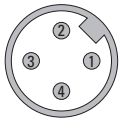

Dimensions

Dimensions in mm [inch]

Draw wire mechanics with encoder

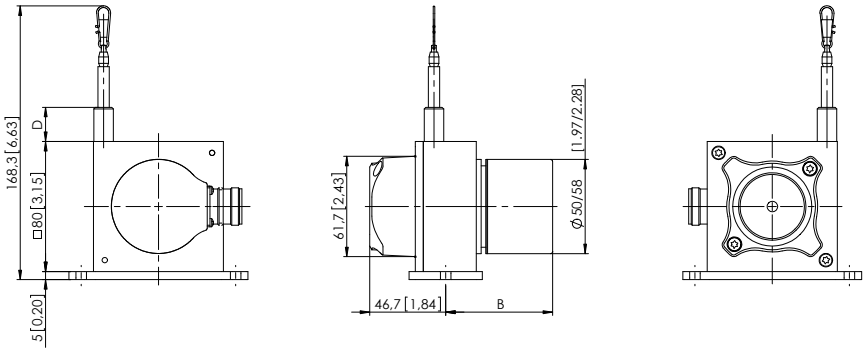

Measuring range	D
1000 mm	21 [0.83]
2000 mm	35 [1.38]
3000 mm	35 [1.38]

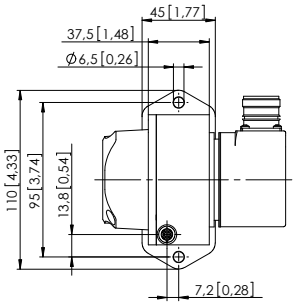

Dimension **B** depends on the encoder used	
Encoder	**B**
Sendix incremental (5000) D8.4B1.XXXX.00XX.XXXX	54.25 [2.12]
Sendix absolute (5863) D8.4B1.XXXX.63XX.XXXX	66.75 [2.63]
Sendix absolute (5868) D8.4B1.XXXX.68XX.XXXX	93.25 [3.67]

Draw wire mechanics with analogue sensor

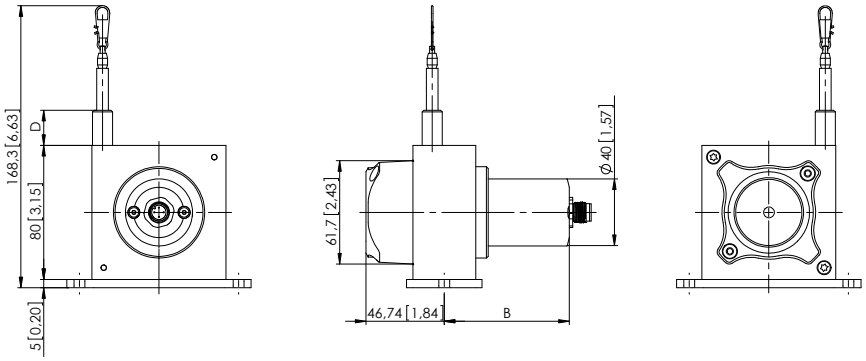

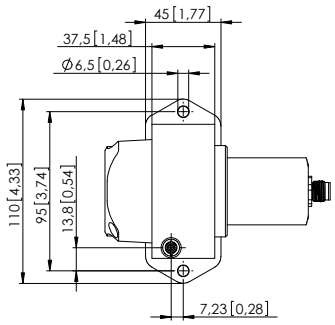

Sensor type	Measuring length	B	D
Potentiometer	1000 mm	74 [2.91]	21 [0.83]
	2000 mm	74 [2.91]	21 [0.83]
	3000 mm	102.5 [4.04]	65 [2.56]
4 ... 20 mA 0 ... 10 V	1000 mm	87.5 [3.44]	21 [0.83]
	2000 mm	87.5 [3.44]	21 [0.83]
	3000 mm	102.3 [4.03]	78.5 [3.09]

© Fritz Kübler GmbH, subject to errors and changes. 04/2016