LCD pulse counters | With count direction AC (battery) | Codix 132

The Codix 132 is a simple battery powered pulse counter with count and count direction input, 8-digit LCD display, optional backlighting, for high voltage applications 10 ... 260 V AC/DC.

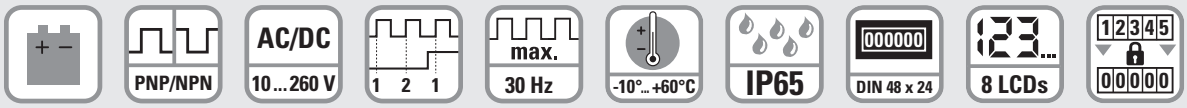

Battery powered | Pulse counter/ Totaliser | Pulse voltage | Count with direction (DIR) | Max. count frequency | Temperature range | High protection level | DIN front bezel | LCD display | Lockable reset

Powerful

- High quality LCD display with 8 mm high figures
- Count direction adding and subtracting via direction input
- Battery life approx. 8 years
- Optional display backlighting
- Filter function for bounce-free counting with mechanical contacts
- Count frequency max. 30 Hz
- High protection level IP65

Simple

- Screw terminals, RM 5 mm
- Reset key lockable via the input ‚Reset Enable'
- High voltage version for 10 … 260 V AC/DC voltage pulses
- Large 8-digit LCD display with 8 mm high figures

Order code

6.132 . 012 . 8 X 3
(a) (b)

a *Backlighting*
5 = without [1)]
6 = with [1)]

b *Count input (input type: count) – single-channel, adding or subtracting counting*

	Input type	*INP A*				*INP B*			
3[1)] =	Cnt.Dir [2)]	10 ... 260 V AC/DC	Direction	AC/DC	30 Hz	10 ... 260 V AC/DC	count	AC/DC	30 Hz

Delivery specification
- Pulse counter
- Mounting clip
- Front bezel for screw mounting (T008181)
  56 x 40 mm [2.20 x 1.57"],
  panel cut-out 50 x 25 mm [1.97 x 0.98"]
- Front bezel for clip mounting (T008180)
  53 x 28 mm [2.09 x 1.10"],
  panel cut-out 50 x 25 mm [1.97 x 0.98"]
- Gasket
- Instruction manual, multilingual

1) Stock types
2) Counting input with counting direction input

© Fritz Kübler GmbH, subject to errors and changes. 10/2013

LCD pulse counters | With count direction AC (battery) | Codix 132

Accessories	Dimensions in mm [inch]	Order-No.
Adapter front bezel, 72 x 36 [2.83 x 1.42]	For cut-out 68 x 33 [2.68 x 1.30] to cut-out 45 x 22.2 [1.77 x 0.87], for counters 48 x 24 [1.89 x 0.94], as set black and silver anodised	**162704 Set**
Adapter front bezel, 48 x 48 [1.89 x 1.89]	For cut-out 45 x 45 [1.77 x 1.77] to cut-out 45 x 22.2 [1.77 x 0.87], with clip mounting for counters 48 x 24 [1.89 x 0.94] black	**T008883**
Adapter front bezel, 60 x 50 [2.36 x 1.97]	For cut-out 54 x 29 [2.13 x 1.14] to cut-out 45 x 22.2 [1.77 x 0.87], with screw mounting and gasket for counters 48 x 24 [1.89 x 0.94] black	**N003001**
Transparent cover, lockable, IP65	For cut-out 54 x 29 [2.13 x 1.14], for screw mounting to front bezel F1B or adapter front bezel N003001, for counters with cut-out 50 x 25 [1.97 x 0.98] or 45 x 22.2 [1.77 x 0.87]	**N003002**
Sealing cover type K1, IP65	Suitable for front bezel 60 x 50 [2.36 x 1.97], for screw mounting of electromech. counters and via adapter front bezel N003001 for counters 48 x 24 [1.89 x 0.94]	**G008301**
Mounting frame with cut-out 50 x 25 [2.36 x 1.97] via separate adapter also for 45 x 22.2 [1.77 x 0.87]	For snap-on mounting on 35 [1.38] top-hat DIN rail, for counters 53 x 28 [2.09 x 1.10] and via separate adapter (T008180) for counters 48 x 24 [1.89 x 0.94] chromated	**G300004**

Suitable gaskets as well as further accessories can be found in the accessories section or in the accessories area of our website at: www.kuebler.com/accessories.

Technical data

General technical data

Display	LCD, 8 digits, 8 mm [0.32"] high
Backlighting	external electrical source 24 V DC ±20 %, 50 mA
Modes	counting direction (count and direction input)
Display range	-9999999 ... 99999999, with overflow display
Reset	manual and electrical
Working temperature	-10°C ... +55°C [+14°F ... +131°F] (non-condensing)
Operating temperature	-10°C ... +60°C [+14°F ... +140°F] (non-condensing)
Storage temperature	-20°C ... +70°C [-4°F ... +158°F]
Altitude	up to 2000 m [6562']

Electrical characteristics

Power supply		internal lithium battery approx. 8 years at 20°C [68°F]
EMC	Emitted interference	EN 55011 class B
	Immunity to interference	EN 61000-6-2
Device safety	Designed to	EN 61010 part 1
	Protection class	2
	Application area	Pollution level 2
UL approval		File-No.: E128604

Mechanical characteristics

Housing	dark grey RAL 7021
Protection	IP65 (front side)
Weight	approx. 50 g [1.76 oz]

Counting inputs

Counting input of the high voltage versions (10 ... 260 V DC/AC)		
Counting and direction input		
Optocoupler input		max. 30 Hz
Minimum pulse time		16 ms
Switching level	LOW	0 ... 2 V AC/DC
	HIGH	10 ... 260 V AC/DC
Reset input		
Minimum pulse time	DC	50 ms
	High voltage	16 ms
Contact input DC – NPN	LOW	0 ... 0.7 VDC
	HIGH	3 ... 30 V DC
Electrical reset key locking		
Contact input		open collector NPN (switching at 0 V)
Switching level – NPN	LOW	0 ... 0.7 V DC
	HIGH	3 ... 5 V DC

Terminal assignment

AC type: 6.132.012.8x3

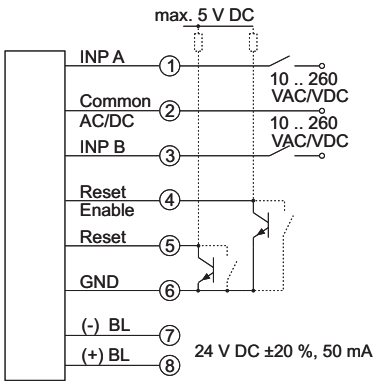

BL = backlighting

LCD pulse counters	With count direction AC (battery)	Codix 132

Dimensions

Dimensions in mm [inch]

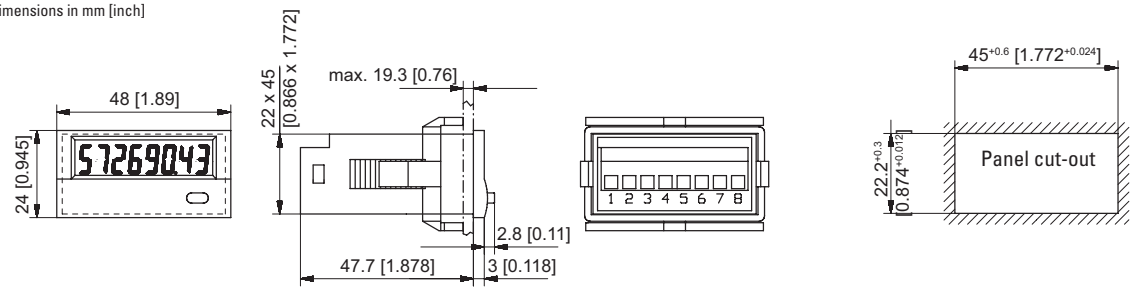

Front bezel for clip mounting (included in delivery)

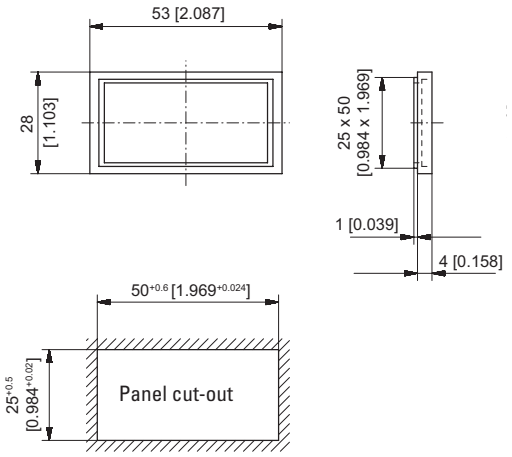

Front bezel for screw mounting (included in delivery)

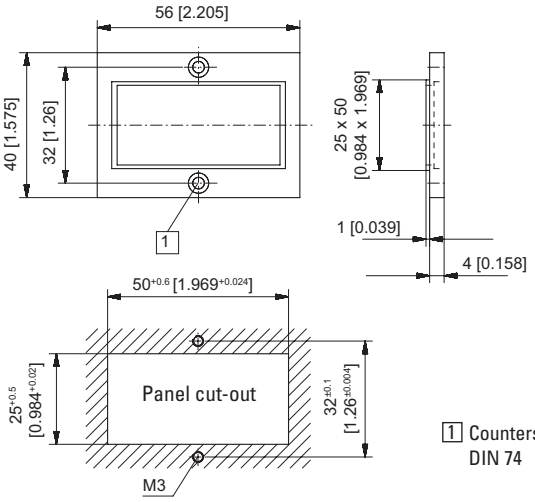

1 Countersinking Af3, DIN 74

© Fritz Kübler GmbH, subject to errors and changes. 10/2013