STANDARD SPECIFICATIONS

Model Type	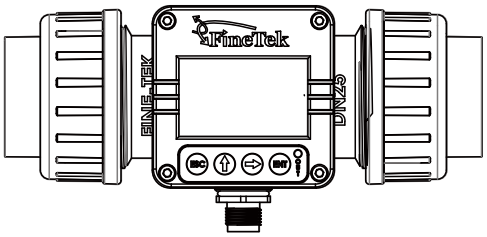	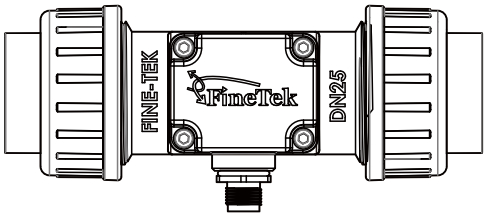	
SPEC	**EPR1** Intelligent All-in-one model	**EPR1** Flow transmitter model	**EPR1** Pulse output model
Applicable pipe diameter	DN20、DN25、DN40、DN50		
Flow velocity range	0.3~10m/s		
Accuracy	Under standard K Factor ±3%(Flow velocity 6~10m/s reach±0.5%)		
Linearity	±0.5% F.S.(10m/s)		
Repeatability	±0.4%		
Measuring principle	Magnetic		
Viscosity range	300 cSt，max.		
Impurity range	1%，max.(Size of particles 0.5mm max.)		
Process temp.	Engineering plastics: -15℃~60℃(5℉~140℉) Stainless steel: -15℃~100℃((5℉~212℉)		
Ambient humidity	＜80%, non-condensing		
Installation method	Transmitter +T-fitting		
Process pressure	10-bar，max.		
IP rating	IP66, the connector shall be inserted and fastened		
Analog output	4~20mA		N/A
impedance	1300Ω at 36Vdc, 1000Ω at 30Vdc, 700Ω at 24Vdc 450Ω at 18Vdc, 200Ω at 12Vdc		
Pulse output	NPN，PNP 200mA overcurrent protection		
Frequency range	0~300Hz		N/A
Display	LCM,128*64	N/A	
Back-lit	YES	N/A	
Power supply voltage	12~36Vdc，±10%		
Power consumption	＜1.5VA		
Reverse protection of power supply	YES	YES	
Communication port	RS485,Modbus		N/A
Accumulated flow storage device	16K,FRAM	NO	

DIMENSIONS

INTELLIGENT ALL-IN-ONE MODEL

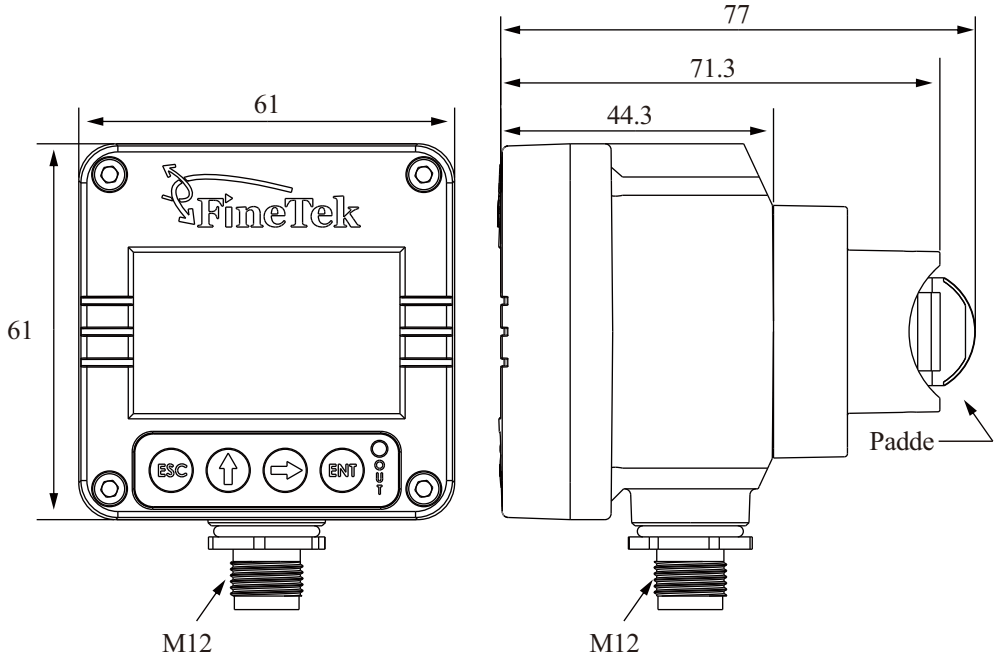

FLOW TRANSMITTER MODEL & PULSE OUTPUT MODEL

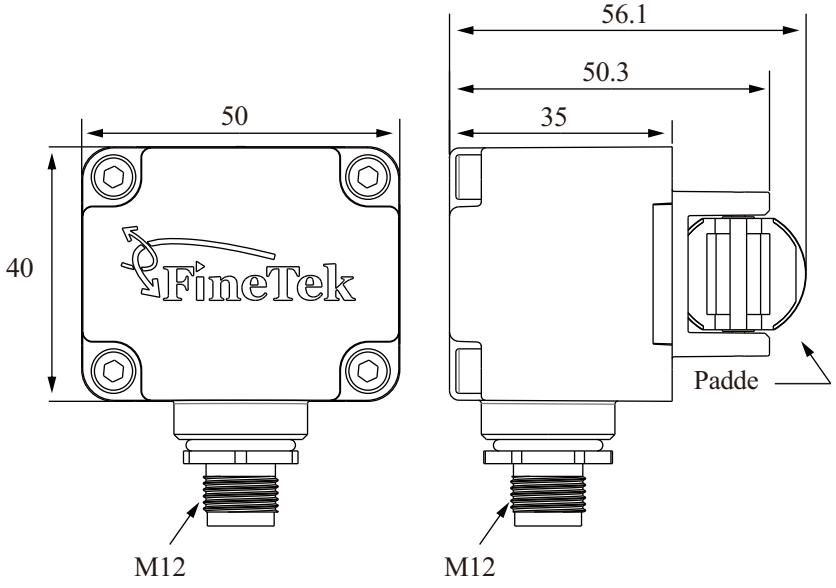

DIMENSIONS

INTELLIGENT ALL-IN-ONE MODEL (ENGINEERING PLASTICS)

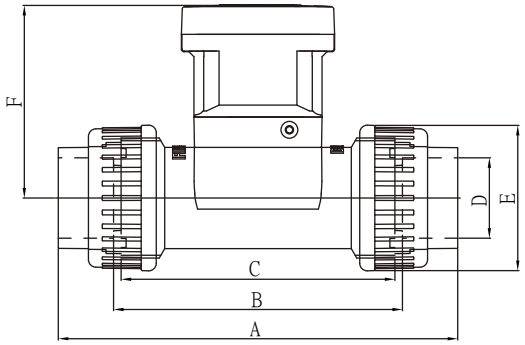

Diameter- DN (mm)	Pipe standards	A (mm)	B (mm)	C (mm)	D (mm)	E (mm)	F (mm)
20	DIN/ISO ASTM JIS CNS 4053-1	144	106	100	25 26.7 26.45 26	53	76.3
25	DIN/ISO ASTM JIS	159	115	109	32 33.4 32.55	58	76.7
40	DIN/ISO ASTM JIS	189	125	119	50 48.3 48.7	83	83.3
50	DIN/ISO ASTM JIS CNS 4053-1	216	140	130	63 60.3 60.8 60	103	90

INTELLIGENT ALL-IN-ONE MODEL (STAINLESS STEEL)

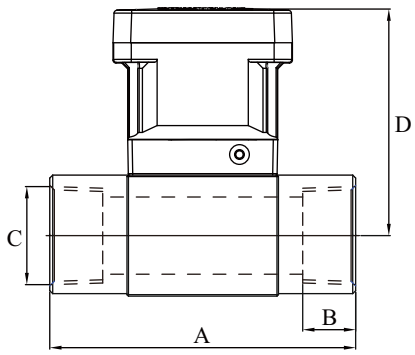

Diameter- DN (mm)	A (mm)	B (mm)	C (mm)	D (mm)
25	104	23 18 18	PF 1” PT 1” NPT 1”	77
40	129	23 22 22	PF 1-1/2” PT 1-1/2” NPT 1-1/2”	83.4

DIMENSIONS

FLOW TRANSMITTER MODEL & PULSE OUTPUT MODEL (ENGINEERING PLASTICS)

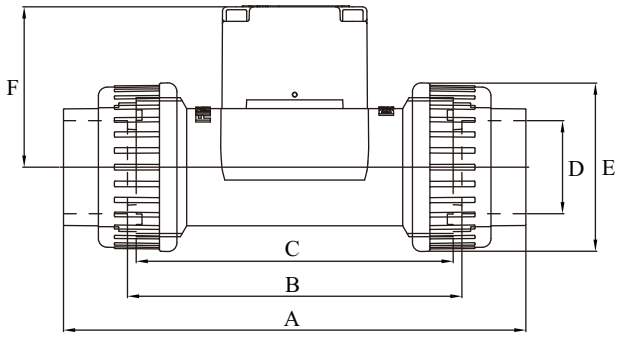

Diameter- DN (mm)	Pipe standards	A (mm)	B (mm)	C (mm)	D (mm)	E (mm)	F (mm)
20	DIN/ISO ASTM JIS CNS 4053-1	144	106	100	25 26.7 26.45 26	53	54.8
25	DIN/ISO ASTM JIS	159	115	109	32 33.4 32.55	58	55.2
40	DIN/ISO ASTM JIS	189	125	119	50 48.3 48.7	83	62
50	DIN/ISO ASTM JIS CNS 4053-1	216	140	130	63 60.3 60.8 60	103	68.5

FLOW TRANSMITTER MODEL & PULSE OUTPUT MODEL (STAINLESS STEEL)

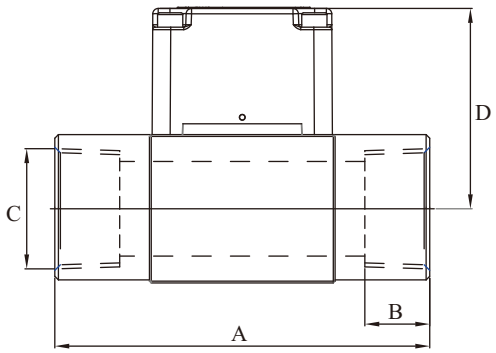

Diameter- DN (mm)	A (mm)	B (mm)	C (mm)	D (mm)
25	104	23 18 18	PF 1” PT 1” NPT 1”	55.6
40	129	23 22 22	PF 1-1/2” PT 1-1/2” NPT 1-1/2”	62

DIMENSIONS

T-FITTING(ENGINEERING PLASTICS)

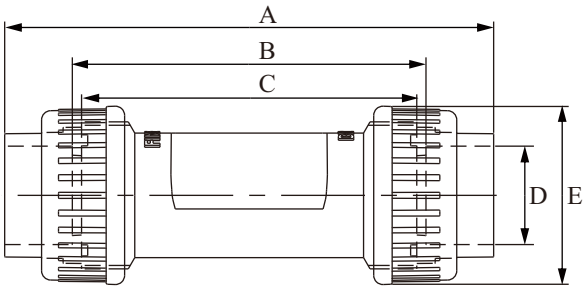

Diameter- DN (mm)	Pipe standards	A (mm)	B (mm)	C (mm)	D (mm)	E (mm)
20	DIN/ISO ASTM JIS CNS 4053-1	144	106	100	25 26.7 26.45 26	53
25	DIN/ISO ASTM JIS	159	115	109	32 33.4 32.55	58
40	DIN/ISO ASTM JIS	189	125	119	50 48.3 48.7	83
50	DIN/ISO ASTM JIS CNS 4053-1	216	140	130	63 60.3 60.8 60	103

T-FITTING (STAINLESS STEEL)

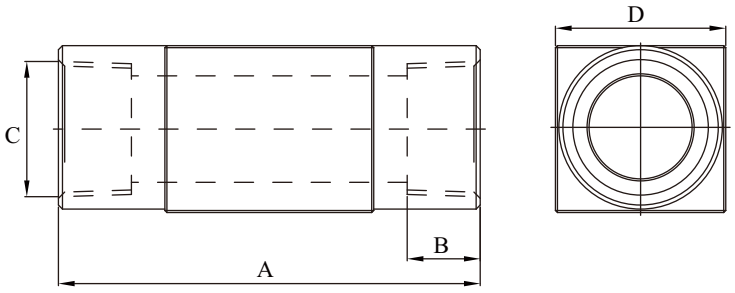

Diameter- DN (mm)	A (mm)	B (mm)	C (mm)	D (mm)
25	104	23 18 18	PF 1” PT 1” NPT 1”	55.6
40	129	23 22 22	PF 1-1/2” PT 1-1/2” NPT 1-1/2”	62

SELECTING FLOW AND PIPE DIAMETER

Pipe diameter (mm)	Flow Range (m^3/h)	
	Flow velocity 0.3m/s (min)	Flow velocity 10m/s (max)
20	0.34	11.31
25	0.53	17.67
40	1.35	45.23
50	2.12	70.68

RELATIONSHIP BETWEEN K VALUE AND FITTING DIAMETER

Material	Connection & Standard Type	K Factor (Pulse/Liter)			
		DN20	DN25	DN40	DN50
Intelligent All-in-One Model					
PVC	DIN/ISO	70	49	17	9.2
	ASTM	70	49	17	9.2
	JIS	70	49	17	9.2
	CNS 4053-1	70	---	---	---
Stainless	Thread PF	---	49	17	---
	Thread PT	---	49	17	---
	Thread NPT	---	49	17	---
Flow transmitter type & Pulse Output type					
PVC	DIN/ISO	56.5	30	8.3	5.92
	ASTM	56.5	30	8.3	5.92
	JIS	56.5	30	8.3	5.92
	CNS 4053-1	56.5	---	---	5.92
Stainless	Thread PF	---	30	8.3	---
	Thread PT	---	30	8.3	---
	Thread NPT	---	30	8.3	---

*US: GL (Gallon)K factor = Pulse/Liter x 3.785; UK: GL (Gallon) K factor = Pulse/Liter x 4.546.

CONTROL SYSTEM DIAGRAM

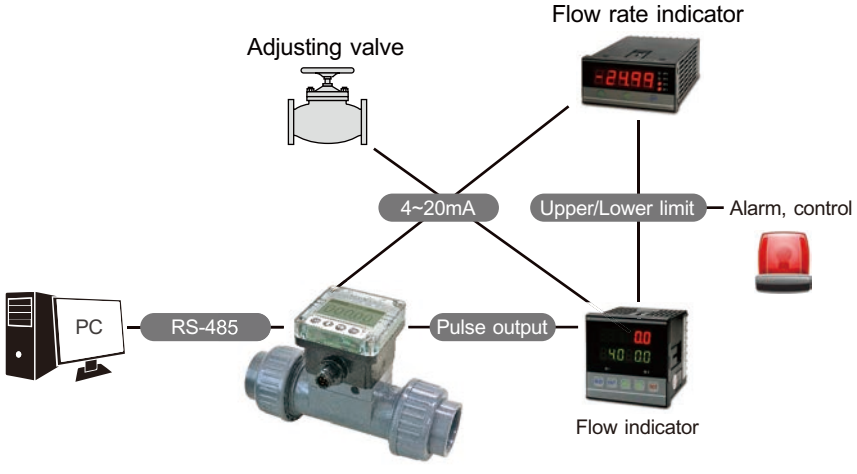

FineTek

ORDER INFORMATION

⑨ ⑩ ⑪ ⑫ ⑬ ⑭ ⑮ ⑯ ⑰ ⑱ ⑲ ⑳ ㉒

EPR1 0 0 0 0 -□□□□□□□□□□□□ A□

⑨⑩⑪ Pipe diameter

020: DN20(3/4")
025: DN25(1")
040: DN40(1-1/2")
050: DN50(2")

⑫ Display model

A: Without display
B: LCM display

⑬⑭ Pipe material

MA: SUS 304
MB: SUS 316
MC: SUS 316L
23: PVC

⑮⑯ T-fitting standand

00: None
AA: JIS
AB: ISO
AC: ASTM
AD: DIN

⑰⑱ T-fitting standand connection type

00: None
02: PT female
04: PF female
06: NPT female

⑲⑳ Blade material

18: P.P
24: PVDF

㉒ Input / Output

A: 4~20mA, RS-485, PNP NPN 200mA
B: PNP NPN 200mA