Level Switch NW1

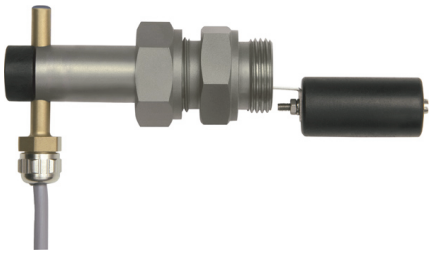

- **Highly reproducible**
- **Normally open or normally closed contact**

Characteristics

Mechanical level monitor for fluid media, with contact-free triggering of a reed contact.

Technical data

Switch	reed switch	
Process connection	male thread G $^3/_4$ A	
Density of medium	Spansil float Stainless steel float	³ 0.7 g/cm³ ³ 0.9 g/cm³
Pressure resistance	Spansil float Stainless steel float PVDF float	PN 25 bar PN 10 bar PN 25 bar
Medium temperature	-20..+110 °C (optional 150 °C)	
Ambient temperature	-20..+70 °C	
Media	water, oils	
Wiring	'normally open' or 'normally closed' No. 0.225 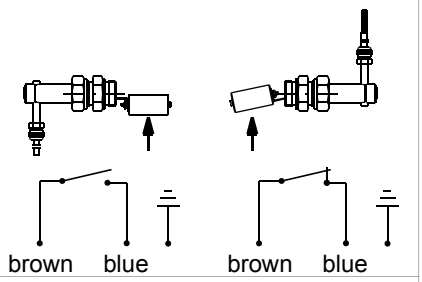 brown blue brown blue	
Switching voltage	max. 230 V AC	
Switching current	max. 1 A	
Switching capacity	max. 50 VA	
Protection class	1 - PE connection	
Ingress protection	IP 65	
Electrical connection	cable 1.5 m	
Materials medium-contact	*Brass construction:* CW614N nickelled, 1.4301, 1.4571, Spansil (NBR), Hard ferrite, NBR	*Stainless steel construction:* 1.4305, 1.4571, Hard ferrite, FKM
Non-medium-contact materials	CW614N, nickelled, CW614N, NBR, PVC, POM	
Weight	0.35 kg	
Installation location	horizontal installation	

Dimensions

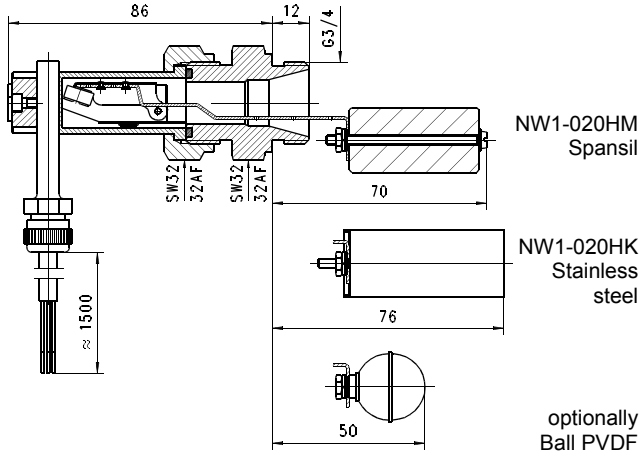

Handling and operation

- It must be ensured that the values given for voltage, current, and power are not exceeded.
- When switched on, a load must be connected in series.
- The electrical details apply to ohmic loads. Capacitive, inductive and lamp loads must be operated using a protective circuit.
- Not suitable for use in media with ferritic particles.

Ordering code

	1.	2.	3.	4.
NW1 -	**020**	**H**		

❍=Option

1.	**Connection size**	
	020	threaded connection G $^3/_4$ A
2.	**Process connection**	
	H	screw-in thread
3.	**Connection material**	
	M	brass
	K	stainless steel
4.	**Switching unit option**	
	A	❍ for switching unit ATEX A-U1-2 The switching unit must be ordered in addition.

Options

- Float ball PVDF
- Float cylinder stainless steel