STANDARD MODEL

Dimensions	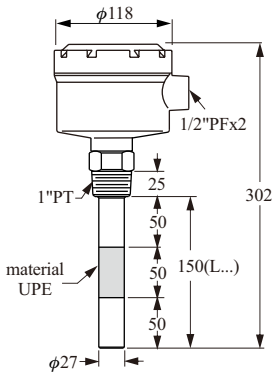	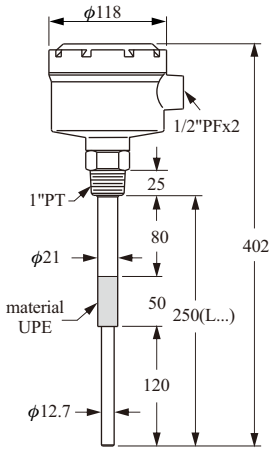	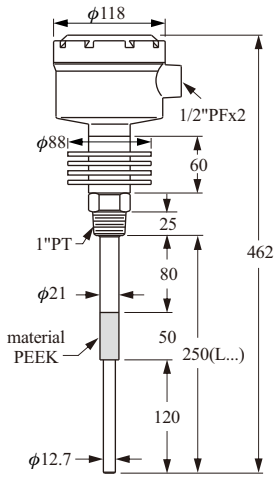
Order No.	**[STANDARD MODEL] SA110**	**[STANDARD MODEL] SA111**	**[HI-TEMP. MODEL] SA120**
Ambient temp.	-20°C~60°C	-20°C~60°C	-20°C~60°C
Operating temp.	-20°C~80°C	-20°C~80°C	-20°C~200°C
Operation Pressure	20kg/cm^2	20kg/cm^2	20kg/cm^2
Prob material	SUS 304/316	SUS 304/316	SUS 304/316
Insulated material	UPE	UPE	PEEK
Connection	1"PT Screw (SUS)	1"PT Screw (SUS)	1"PT Screw (SUS)
Sensitivity range	14.6pF (std.)		
Weight	Approx. 1.9kg	Approx. 1.9kg	Approx. 2.4kg
Housing	Aluminum IP65		
Supply voltage	110/220Vac±10% or 19~24Vdc		
Delay time	0~6 sec		
Power consumption	2W		
Output rating	Relay: 5A/250Vac/30Vdc,NPN 100mA		

Dimensions	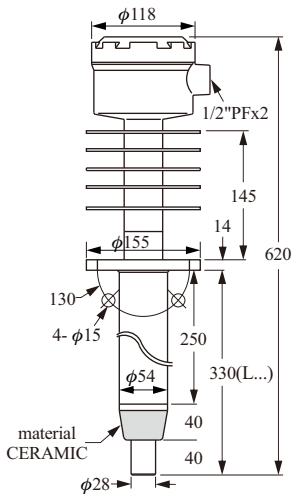	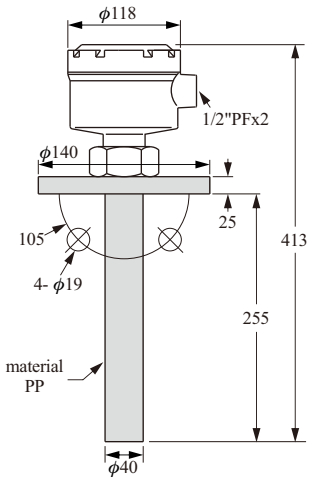	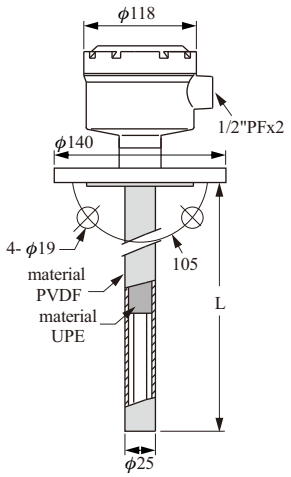
Order No.	**[SUPER HI-TEMP. MODEL] SA128**	**[CORROSION-PROOF MODEL] SA130**	**[CORROSION-PROOF MODEL] SA132**
Ambient temp.	-20°C~60°C	-20°C~60°C	-20°C~60°C
Operating temp.	-20°C~800°C	-20°C~80°C	-20°C~120°C
Operation Pressure	ATM	20kg/cm^2	20kg/cm^2
Prob material	SUS 304/316	SUS 304 Coating PP	SUS304 Coating PVDF
Insulated material	CERAMIC	UPE	UPE
Connection	2-1/ 2"x5kg/cm^2 Flange(SUS)	1-1/2"x10kg/cm^2 Flange(PP)	1-1/2"x10kg/cm^2 Flange(SUS) (5mm PVDF)
Sensitivity range	14.6pF (std.)		
Weight	Approx. 6.5kg	Approx. 2kg	————————
Housing	Aluminum IP65		
Supply voltage	110/220Vac±10% or 19~24Vdc		
Delay time	0~6 sec		
Power consumption	2W		
Output rating	Relay: 5A/250Vac/30Vdc,NPN 100mA		

Dimensions	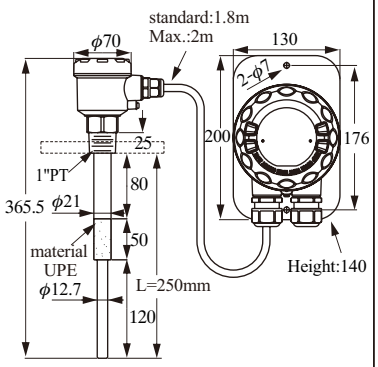	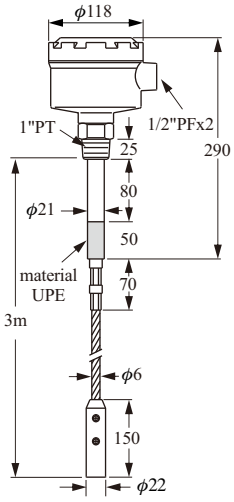	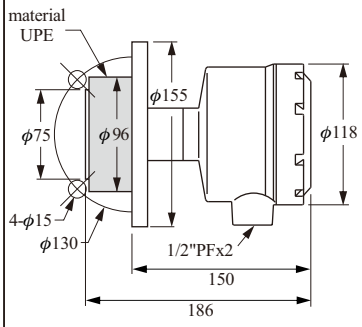
Order No.	**[REMOTE PROBE MODEL] SA140**	**[WIRE-PROBE MODEL] SA150**	**[PLATE MODEL] SA160**
Ambient temp.	-20°C~60°C	-20°C~60°C	-20°C~60°C
Operating temp.	-20°C~80°C	-20°C~80°C	-20°C~80°C
Operation Pressure	20kg/cm^2	20kg/cm^2	20kg/cm^2
Prob material	SUS 304/316	SUS 304/316 cable	SUS 304/316
Insulated material	UPE	UPE	UPE
Connection	1"PT Screw (SUS)	1"PT Screw (SUS)	2-1/2"x 5kg/cm^2 Flange(SUS)
Sensitivity range	14.6pF (std.)		
Weight	Approx. 3kg	Approx. 4.1kg	Approx. 3.2kg
Housing	Aluminum IP65		
Supply voltage	110/220Vac±10% or 24Vdc±20%	110/220Vac±10% or 19~24Vdc	
Delay time	0~8 sec	0~6 sec	
Power consumption	2W		
Output rating	Relay: 5A/250Vac/30Vdc,NPN 100mA		

Dimensions	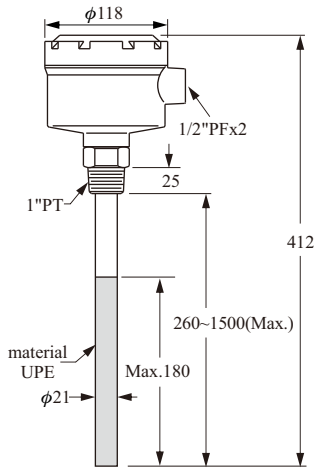	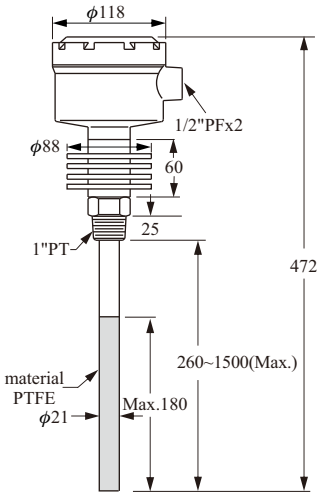
Order No.	**[ANTI-STATIC MODEL] SA180**	**[HI-TEMP. ANTI-STATIC MODEL] SA181**
Ambient temp.	-20°C~60°C	-20°C~60°C
Operating temp.	-20°C~80°C	-20°C~200°C
Operation Pressure	20kg/cm^2	20kg/cm^2
Prob material	UPE Coating	PTFE Coating
Insulated material	UPE	PTFE
Connection	1"PT Screw (SUS)	
Sensitivity range	14.6pF (std.)	
Weight	Approx. 2kg	Approx. 2.5kg
Housing	Aluminum IP65	
Supply voltage	110/220Vac±10% or 19~24Vdc	
Delay time	0~6 sec	
Power consumption	2W	
Output rating	Relay: 5A/250Vac/30Vdc,NPN 100mA	

EXPLOSION PROOF MODEL

NEPSI Ex d/ia IIC T3~T6 Gb/Ga
DIP A20/A21 T_A, T3~T6

Dimensions	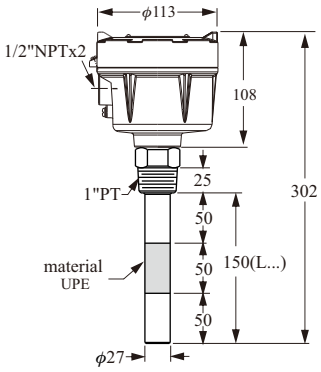	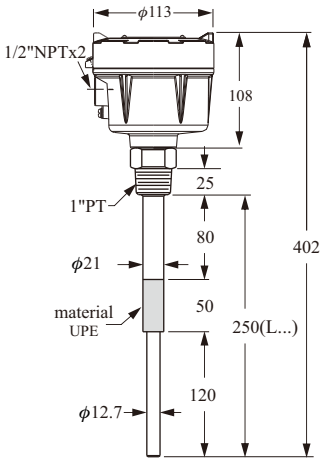	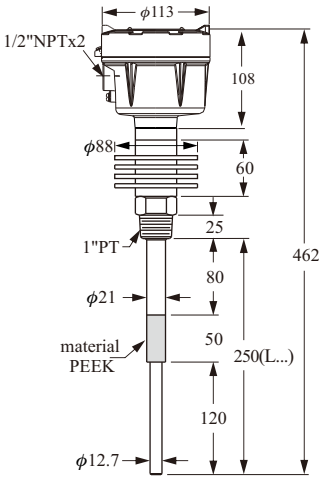
Order No.	**[STANDARD MODEL] SA270**	**[STANDARD MODEL] SA271**	**[HI-TEMP. MODEL] SA272**
Ambient temp.	-20°C~60°C	-20°C~60°C	-20°C~60°C
Operating temp.	-20°C~80°C	-20°C~80°C	-20°C~200°C
Operating pressure	20kg/cm^2	20kg/cm^2	20kg/cm^2
Probe material	SUS 304/316	SUS 304/316	SUS 304/316
Insulated material	UPE	UPE	PEEK
Connection	1"PT Screw (SUS)	1"PT Screw (SUS)	1"PT Screw (SUS)
Sensitivity range	14.6pF (std.)		
Weight	Approx. 1.9kg	Approx. 2.4kg	Approx. 4.1kg
Housing spec.	Aluminum IP65		
Supply voltage	110/220Vac±10% or 24Vdc±20%		
Enclosure protection	Ex d/ia IIC T3~T6 Gb/Ga, DIP A20/A21 T_A ,T3~T6		
Power consumption	2W		
Output contact rating	Relay: 5A/250Vac/28Vdc		
	3 wire NPN output, max. load current 400mA		
	3 wire PNP output, max. load current 400mA		
	4 wire NPN/PNP output, max. 400mA/60Vdc		

Dimensions	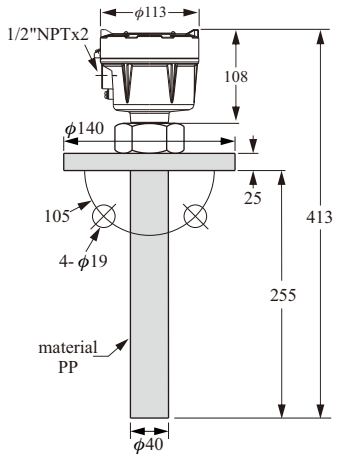	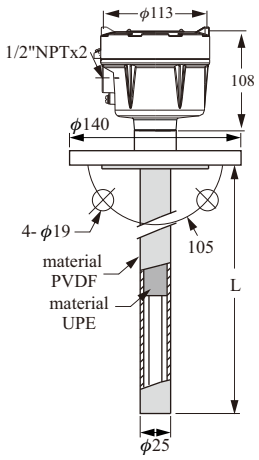	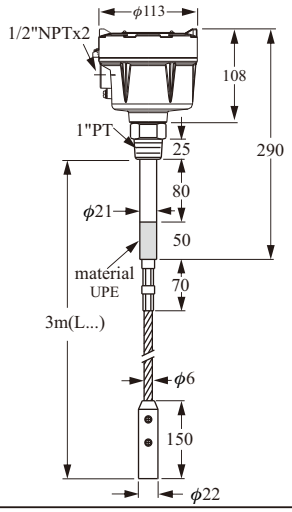
Order No.	**[CORROSION-PROOF MODEL] SA273**	**[CORROSION-PROOF MODEL] SA274**	**[WIRE-PROBE MODEL] SA275**
Ambient temp.	-20°C~60°C	-20°C~60°C	-20°C~60°C
Operating temp.	-20°C~80°C	-20°C~120°C	-20°C~80°C
Operating pressure	20kg/cm^2	20kg/cm^2	20kg/cm^2
Probe material	SUS 304/316(PP Coating)	SUS 304/316(PVDF Coating)	SUS 304/316 Cable
Insulated material	UPE	UPE	UPE
Connection	1-1/2"x10kg/cm^2 (PP)	1-1/2"x10kg/cm^2 (SUS) W / 5mm PVDF Cushion	1"PT Screw (SUS)
Sensitivity range	14.6pF (std.)		
Weight	Approx. 1.9kg	Approx. 2.4kg	Approx. 4.1kg
Housing spec.	Aluminum IP65		
Supply voltage	110/220Vac±10% or 24Vdc±20%		
Enclosure protection	Ex d/ia IIC T3~T6 Gb/Ga, DIP A20/A21 T_A ,T3~T6		
Power consumption	2W		
Output contact rating	Relay: 5A/250Vac/28Vdc		
	3 wire NPN output, max. load current 400mA		
	3 wire PNP output, max. load current 400mA		
	4 wire NPN/PNP output, max. 400mA/60Vdc		

Dimensions	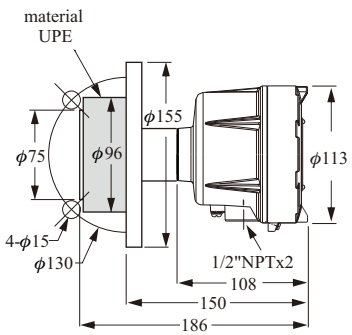	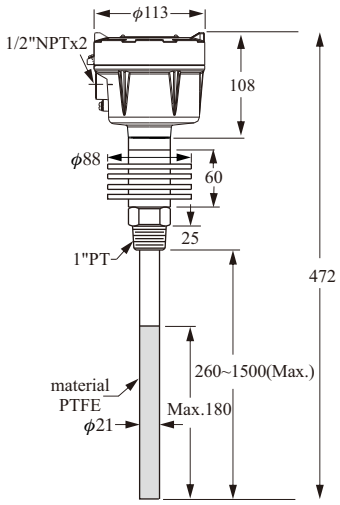	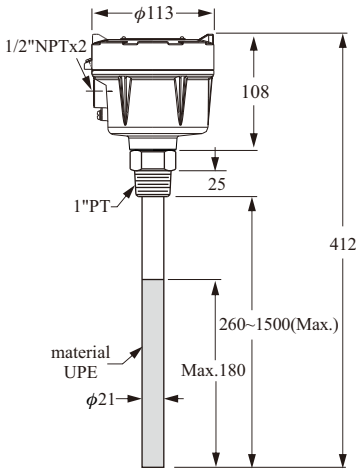
Order No.	**[PLATE MODEL] SA276**	**[HI-TEMP. ANTI-STATIC MODEL] SA277**	**[ANTI-STATIC MODEL] SA278**
Ambient temp.	-20°C~60°C	-20°C~60°C	-20°C~60°C
Operating temp.	-20°C~80°C	-20°C~200°C	-20°C~80°C
Operating pressure	20kg/cm^2	20kg/cm^2	20kg/cm^2
Probe material	SUS 304/316	PTFE Coating	UPE Coating
Insulated material	UPE	PTFE	UPE
Connection	2-1/2"x 5kg/cm^2 Flange (SUS)	1"PT Screw (SUS)	1"PT Screw (SUS)
Sensitivity range	14.6pF (std.)		
Weight	Approx. 3.2kg	Approx. 3.1kg	Approx. 2kg
Housing spec.	Aluminum IP65		
Supply voltage	110/220Vac±10% or 24Vdc±20%		
Enclosure protection	Ex d/ia IIC T3~T6 Gb/Ga, DIP A20/A21 T_A ,T3~T6		
Power consumption	2W		
Output contact rating	Relay: 5A/250Vac/28Vdc		
	3 wire NPN output, max. load current 400mA		
	3 wire PNP output, max. load current 400mA		
	4 wire NPN/PNP output, max. 400mA/60Vdc		

INTRINSICALLY SAFE MODEL

NEPSI Ex ia IIC T3/T4 Ga

Dimensions	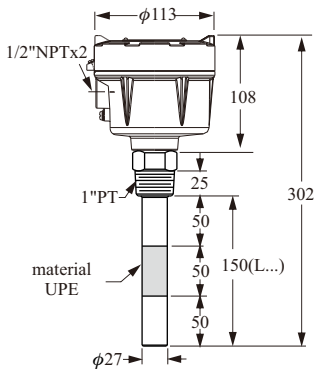	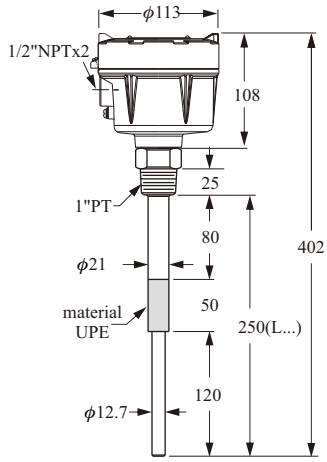	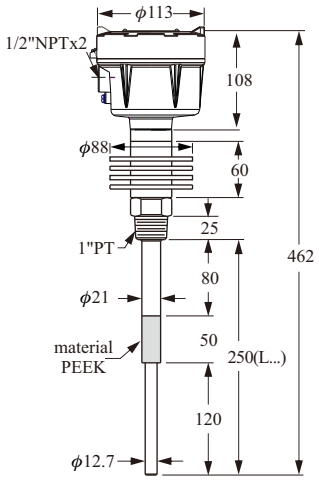
Order No.	**[STANDARD MODEL] SA370(WITH SA-75U)**	**[STANDARD MODEL] SA371(WITH SA-75U)**	**[HI-TEMP. MODEL] SA372(WITH SA-75U)**
Ambient temp.	-20°C~60°C	-20°C~60°C	-20°C~60°C
Operating temp.	-20°C~80°C	-20°C~80°C	-20°C~200°C
Operation Pressure	20kg/cm^2	20kg/cm^2	20kg/cm^2
Prob material	SUS 304/316	SUS 304/316	SUS 304/316
Insulated material	UPE	UPE	PEEK
Connection	1"PT Screw (SUS)	1"PT Screw (SUS)	1"PT Screw (SUS)
Sensitivity range	14.6pF (std.)		
Weight	Approx. 1.9kg	Approx. 2.4kg	Approx. 2.4kg
Housing spec.	Aluminum IP65		
Supply voltage	16~24Vdc		
Enclosure protection	Ex ia IIC T3/T4 Ga		
Power consumption	2W		
Output rating	NPN 100mA		

FineTek

Dimensions	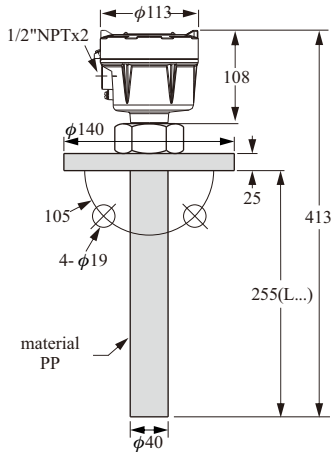	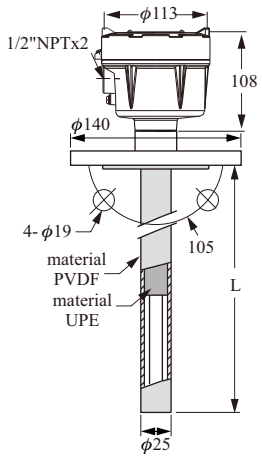	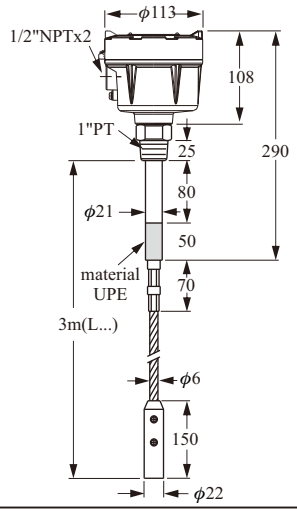
Order No.	**[CORROSION-PROOF MODEL] SA373(WITH SA-75U)**	**[CORROSION-PROOF MODEL] SA374(WITH SA-75U)**	**[WIRE-PROBE MODEL] SA375(WITH SA-75U)**
Ambient temp.	-20°C~60°C	-20°C~60°C	-20°C~60°C
Operating temp.	-20°C~80°C	-20°C~120°C	-20°C~80°C
Operation Pressure	20kg/cm^2	20kg/cm^2	20kg/cm^2
Prob material	SUS 304/316(PP Coating)	SUS 304/316(PVDF Coating)	SUS 304/316 Cable
Insulated material	PTFE or UPE	UPE	UPE
Connection	1-1/2"x10kg/cm^2 (PP)	1-1/2"x10kg/cm^2 (SUS) W / 5 mm PVDF Cushion	1"PT Screw (SUS)
Sensitivity range	14.6pF (std.)		
Weight	Approx. 1.9kg	————————	Approx. 4.1kg
Housing spec.	Aluminum IP65		
Supply voltage	16~24Vdc		
Enclosure protection	Ex ia IIC T3/T4 Ga		
Power consumption	2W		
Output rating	NPN 100mA		

Dimensions	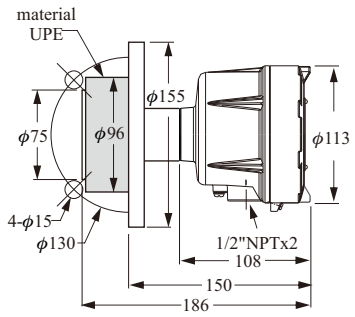	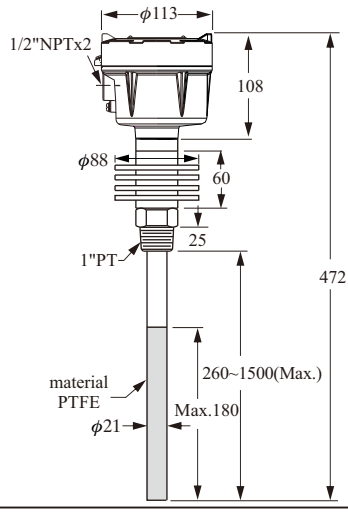	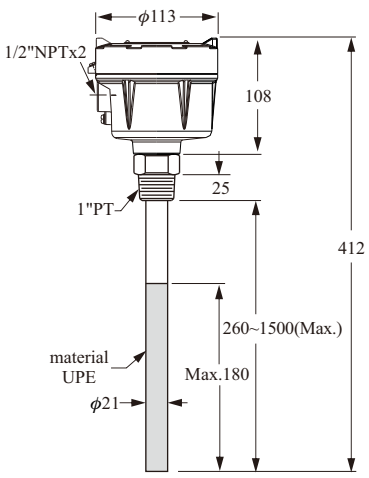
Order No.	**[PLATE MODEL] SA376(WITH SA-75U)**	**[HI-TEMP. ANSI-STATIC MODEL] SA377(WITH SA-75U)**	**[ANTI-STATIC MODEL] SA378(WITH SA-75U)**
Ambient temp.	-20°C~60°C	-20°C~60°C	-20°C~60°C
Operating temp.	-20°C~80°C	-20°C~200°C	-20°C~80°C
Operation Pressure	20kg/cm^2	20kg/cm^2	20kg/cm^2
Prob material	SUS 304/316	PTFE Coating	UPE Coating
Insulated material	UPE	PTFE	UPE
Connection	2-1/2"x 5kg/cm^2 Flange (SUS)	1"PT Screw (SUS)	1"PT Screw (SUS)
Sensitivity range	14.6pF (std.)		
Weight	Approx. 3.2kg	Approx. 3.1kg	Approx. 2kg
Housing spec.	Aluminum IP65		
Supply voltage	16~24Vdc		
Enclosure protection	Ex ia IIC T3/T4 Ga		
Power consumption	2W		
Output rating	NPN 100mA		

ORDER INFORMATION

⑤⑥⑦⑧ ⑨⑩⑪⑫⑬⑭⑮⑯ ⑰⑱⑲⑳㉑㉒㉓㉔㉕

SAX1 □□□□-□□□□□□□□ □□□□□□□□□

⑤⑥ Model

00：Standard
02：Hi-temperature
04：Remote probe
08：Super Hi-temperature

⑦⑧ Certification

00：None
7B：NEPSI-Ex ia
7C：NEPSI-Ex d

(Next page)

⑨ Type

A：ϕ27 Standard type
B：ϕ12.7 Standard type
C：Hi-temperature type
D：Corrosion probe standard type
E：Corrosion probe Hi-temperature type
F：Wire probe type
G：Plate type
H：Anti- Static type

⑩ Power supply

A：AC110V/220V
B : DC24V
C : DC16~24V(NEPSI-Ex ia Only)

Connection

⑪⑫

Flange item
AK：JIS-FF
AN：ANSI-RF
AS：DIN-FF

Thread item
AC：ANSI
AA：JIS

⑬⑭

A7：3/4"
A8：1"
B1：1-1/2"
B2：2"
B4：2-1/2"
D7：DN20
D8：DN25
D9：DN32
E1：DN40
E2：DN50
E3：DN65

⑮⑯

01：PT male
03：PF male
07：NPT male
40：5 kg/cm^2
42：10 kg/cm^2
48：150 Lbs
49：300 Lbs
57：PN10
58：PN16

SAX1 ⑤⑥⑦⑧ - ⑨⑩⑪⑫⑬⑭⑮⑯⑰⑱⑲⑳㉑㉒㉓㉔㉕

⑰ Output signal

R: Relay
P: PNP
N: NPN
M: MOS
(Ex ia only NPN optional)

⑱⑲ Probe material

MA: SUS 304
MB: SUS 316
18: PP coating
21: PTFF coating
24: PVDF coating
33: UPE coating

⑳㉑ Insulated material

00: None
13: PEEK
32: Ceramics
33: UPE

㉒㉓㉔㉕ Length

Code	Probe Length
0036~3000	0036~3000mm