AC Fan Model Numbering System

General AC Fan

Ex) **SF11580AT 1 08 2 H B L .GN**

MODEL SERIES
SFxxx
SPxxx
DPxxx

VOLTAGE
1 : 115 VAC
2 : 220 -240 VAC

FRAME SIZE
08 : 80 mm
09 : 92 mm
12 : 120 mm

FRAME THICKNESS
2 : 25 mm
3 : 38 mm

RoHS Compliance

TERMINALS
T : Terminal
L : Lead wire

BEARING SYSTEM
B : Ball
S : Sleeve

SPEED
X : Super
H : High
M : Middle
L : Low

New Type AC Fan

Ex) **A 1 17 5 – H B T**

MODEL SERIES
A : New AC fan series
AB : New AC blower series
MA : MagLev AC Fan series

VOLTAGE
1 : 115 VAC 3 : 380 VAC
2 : 220-240 VAC

FRAME SIZE
08 : 80 mm 17 : 172 mm
09 : 92 mm 25 : 254 mm
12 : 120 mm

FRAME THICKNESS
2 : 25 mm 7 : 72 mm
3 : 31~38mm 9 : 89~90mm
5 : 50~51 mm

TERMINALS
T : Terminal
L : Lead wire

BEARING SYSTEM
V: MagLev
S : Sleeve
B : Ball

SPEED
X : Super
H : High
M : Middle
L : Low

P/N

P/N Suffixes have the following significance :

T	: Thermal Cutout
TC	: Alveolate Motor with Thermal Cutout and Capacitor
TC.R	: Round Frame , Alveolate Motor with Thermal Cutout and Capacitor
N	: New frame
GN	: RoHS compliance

* Alveolate Motor only available in P/N : TC model

SUNON®

120x120x38 mm

95~117 CFM

Specifications

Model	P/N	Bearing	Rating Voltage	Freq.	Power Current	Power Consumption	Speed	Air Flow	Static Pressure	Noise	Weight
		● VAPO ○ BALL ◉ Sleeve	(VAC)	(Hz)	(AMP)	(WATTS)	(RPM)	(CFM)	(Inch-H_2O)	(dB(A))	(g)
A1123-HST	GN	◉	115	50/60	0.28/0.25	23/20	2700/3100	95/115	0.33/0.38	44/49	525
A1123-HSL	GN	◉	115	50/60	0.28/0.25	23/20	2700/3100	95/115	0.33/0.38	44/49	525
A1123-HBT	GN	○	115	50/60	0.28/0.25	23/20	2700/3100	97/117	0.34/0.39	45/50	525
A1123-HBL	GN	○	115	50/60	0.28/0.25	23/20	2700/3100	97/117	0.34/0.39	45/50	525
A2123-HST	GN	◉	220-240	50/60	0.14/0.12	23/20	2700/3100	95/115	0.33/0.38	44/49	525
A2123-HSL	GN	◉	220-240	50/60	0.14/0.12	23/20	2700/3100	95/115	0.33/0.38	44/49	525
A2123-HBT	GN	○	220-240	50/60	0.14/0.12	23/20	2700/3100	97/117	0.34/0.39	45/50	525
A2123-HBL	GN	○	220-240	50/60	0.14/0.12	23/20	2700/3100	97/117	0.34/0.39	45/50	525

Frame : Aluminum alloy

Safety : UL-CUL/TUV/CE/CCC/BSMI

Air Flow-Static Pressure Characteristics

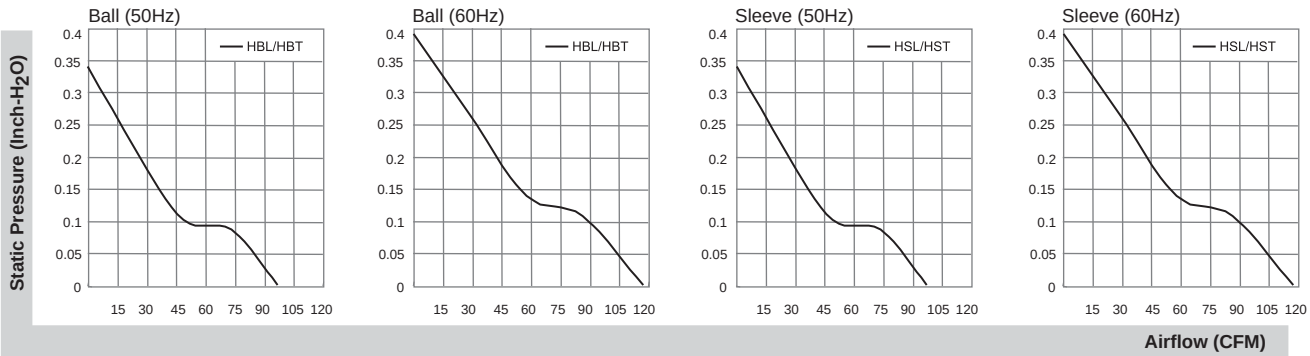
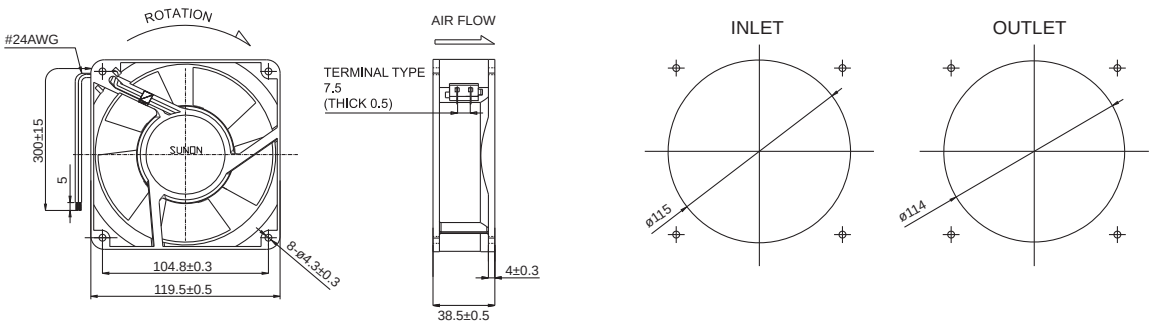
External dimensions(mm)