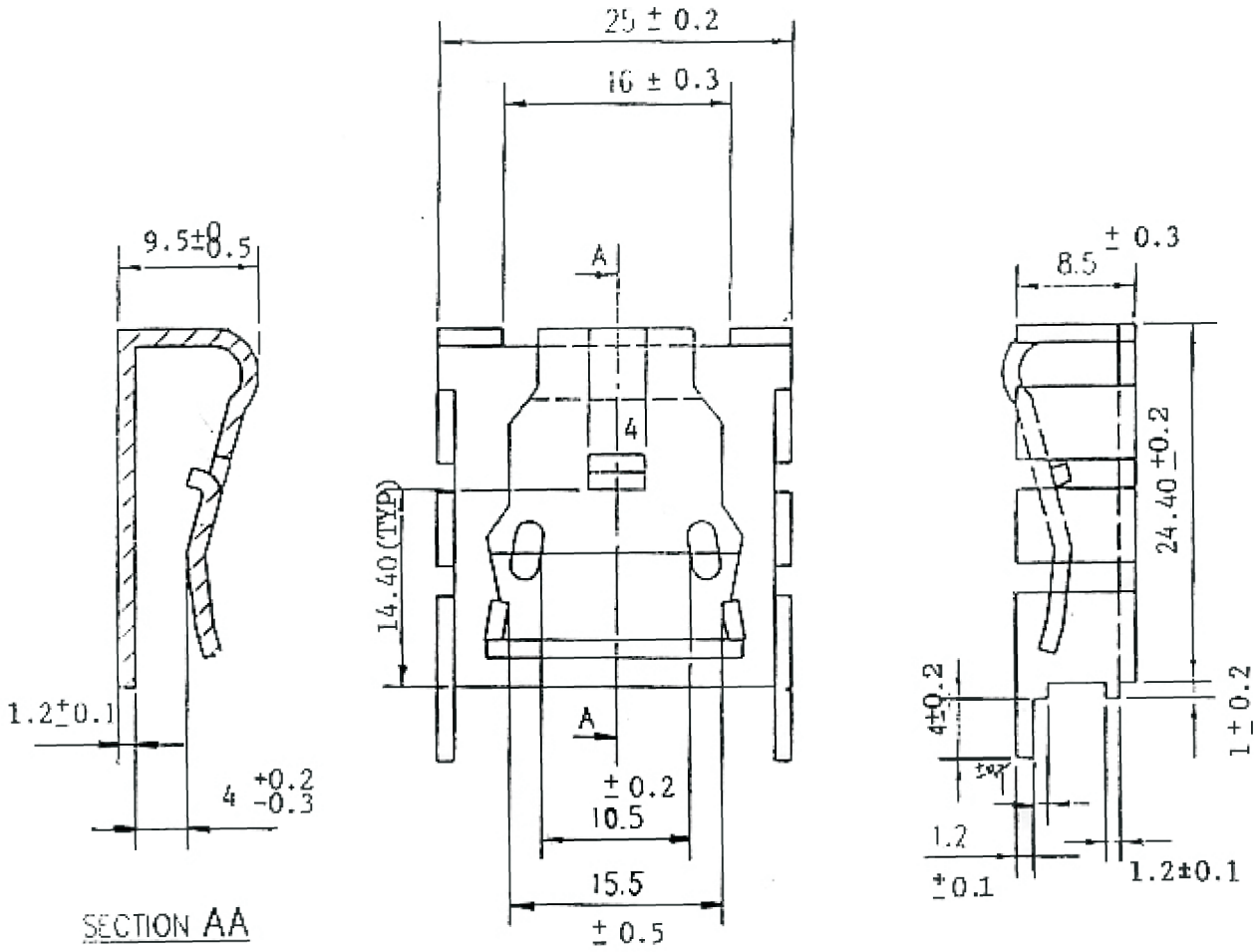

HS-012C	CLEAN
HS-012	ANODIZED BLACK
HS-012T	TIN. PLATED

STONECOLD	TOLERANCE UNIT ±0. .0 ±0. .00 ±0. .000 ±0.	MATERIAL **AL5052; T=1.2MM**	
			PART NO: HS-012
		DIMENSIONS IN MM	