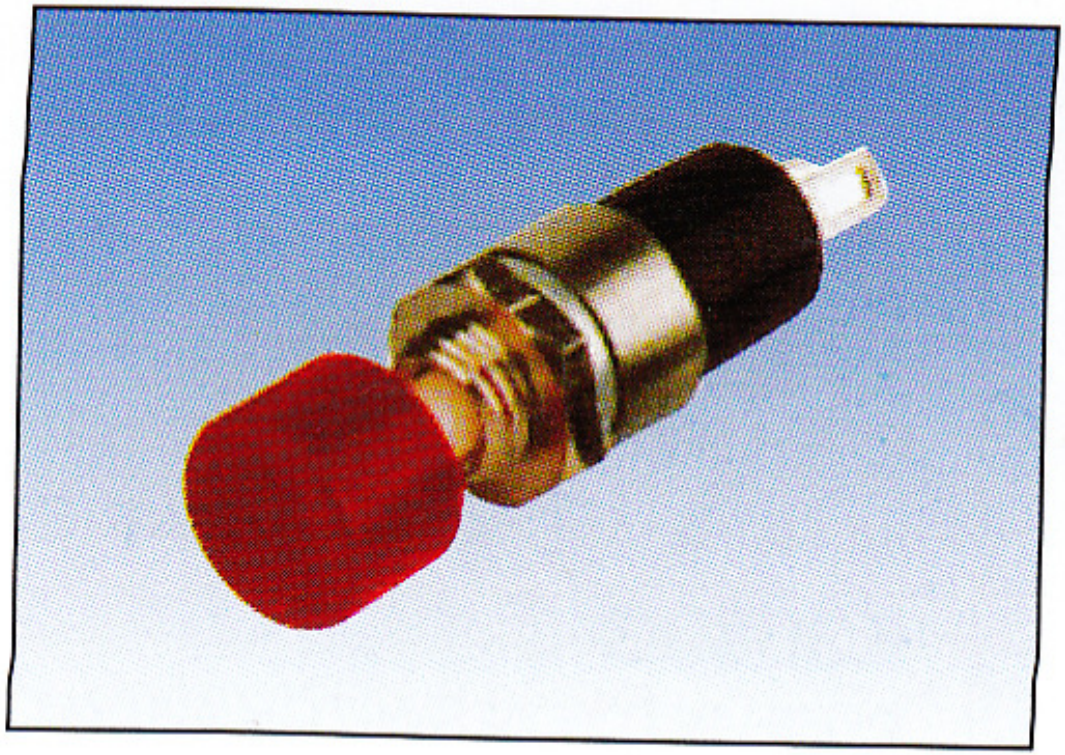

K3077B
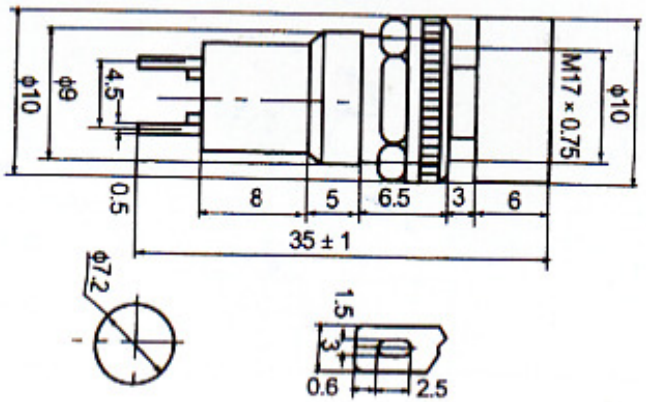
PUSH BUTTON SWITCH ROUND