SPECIFICATIONS

Dimension (Unit:mm)	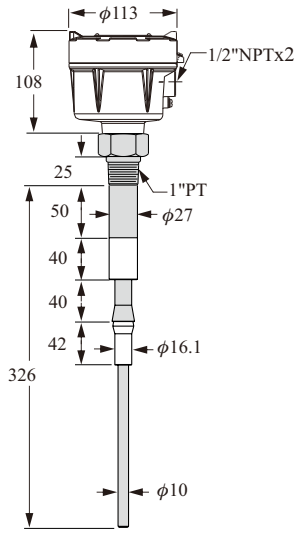	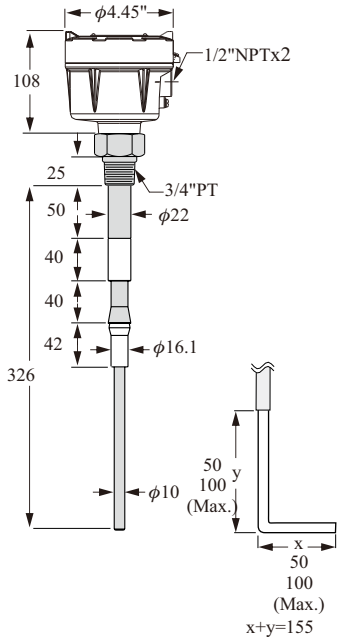	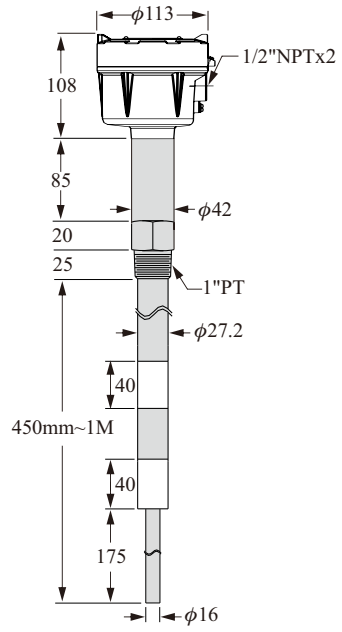
Order No.	**SB2100 [Standard Model]**	**SB2110 [Standard Model]** **SB2120 [Standard L Model]**	**SB2200 [Hi-Temp Model]**
Operating temp.	-40°C~150°C	-40°C~150°C	-40°C~232°C
Ambient temp.	-40°C~70°C	-40°C~70°C	-40°C~70°C
Housing	Aluminum (IP65)	Aluminum (IP65)	Aluminum (IP65)
Probe material	SUS304 or 316	SUS304 or 316	SUS304 or 316
Insulated material	PTFE	PTFE	PEEK
Connection	1" PT	3/4" PT	1" PT
Sensitivity	0.3PF	0.3PF	0.3PF
Supply voltage	24Vdc±20% or 115/230Vac±10%, 50/60Hz	24Vdc±20% or 115/230Vac±10%, 50/60Hz	24Vdc±20% or 115/230Vac±10%, 50/60Hz
Power consumption	Max.2W	Max.2W	Max.2W
Contact rating	5A/250Vac, DPDT	5A/250Vac, DPDT	5A/250Vac, DPDT
Delay time	0~30 sec	0~30 sec	0~30 sec
Fail safe mode	High / low Fail safe mode	High / low Fail safe mode	High / low Fail safe mode
Conduit	1/2" NPT x2 hole	1/2" NPT x2 hole	1/2" NPT x2 hole
Operation pressure	20kg/cm^2	20kg/cm^2	20kg/cm^2

Dimension (Unit:mm)	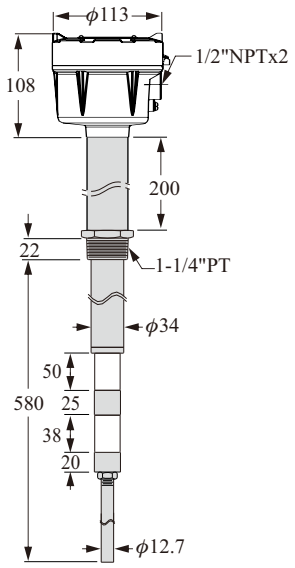	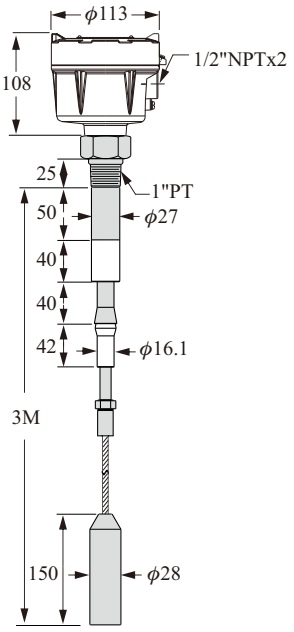	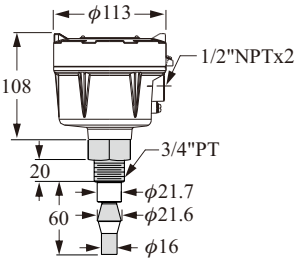
Order No.	**SB2280 [Super Hi-Temp Model]**	**SB2500 [Cable Model]**	**SB2600 [Mini Model]**
Operating temp.	-40°C~550°C	-40°C~150°C	-40°C~150°C
Ambient temp.	-40°C~70°C	-40°C~70°C	-40°C~70°C
Housing	Aluminum (IP65)	Aluminum (IP65)	Aluminum (IP65)
Probe material	SUS304 or 316	SUS304 or 316	SUS304 or 316
Insulated material	Ceramic	PTFE	PTFE
Connection	1-1/4" PT	1" PT	3/4" PT
Sensitivity	0.3PF	0.3PF	0.3PF
Supply voltage	24Vdc±20% or 115/230Vac±10%, 50/60Hz	24Vdc±20% or 115/230Vac±10%, 50/60Hz	24Vdc±20% or 115/230Vac±10%, 50/60Hz
Power Consumption	Max.2W	Max.2W	Max.2W
Contact rating	5A/250Vac, DPDT	5A/250Vac, DPDT	5A/250Vac, DPDT
Delay time	0~30 sec	0~30 sec	0~30 sec
Fail safe mode	High / low Fail safe mode	High / low Fail safe mode	High / low Fail safe mode
Conduit	1/2" NPT x2 hole	1/2" NPT x2 hole	1/2" NPT x2 hole
Operation pressure	ATM	20kg/cm^2	20kg/cm^2

SPECIFICATION

PTB PROOF NO. 09 ATEX 1057 Ⓔx II 2G Ex d IIB T6~T1
Ⓔx II 2D Ex tD A21 IP65 T445°C~T80°C

Dimension (Unit:mm)	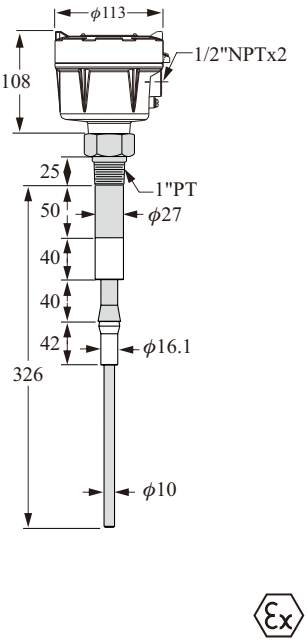	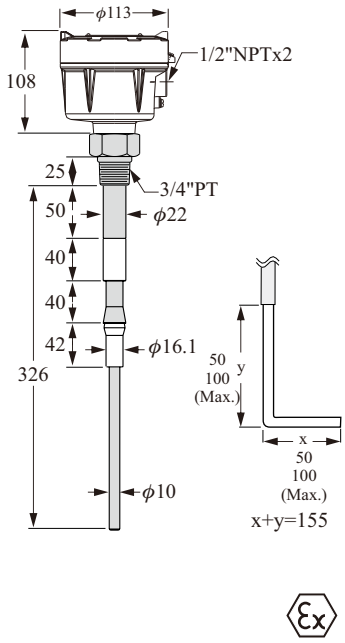	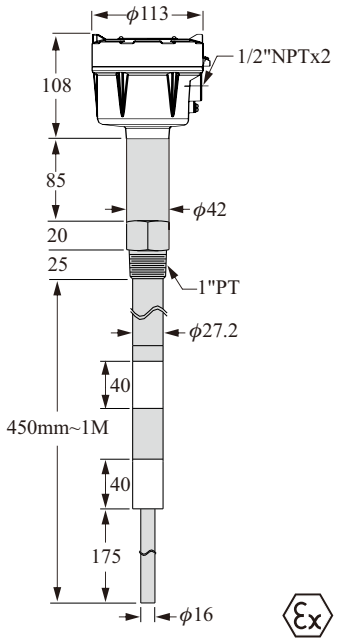
Order No.	**SB1710 [Standard Model]**	**SB1711 [Standard Model]** **SB1712 [Standard L Model]**	**SB1720 [Hi-Temp Model]**
Operating temp.	-40°C~150°C	-40°C~150°C	-40°C~232°C
Ambient temp.	-20°C~70°C	-20°C~70°C	-20°C~70°C
Housing	Aluminum (IP65)	Aluminum (IP65)	Aluminum (IP65)
Probe material	SUS304 or 316	SUS304 or 316	SUS304 or 316
Insulated material	PTFE	PTFE	PEEK
Connection	1" PT	3/4" PT	1" PT
Sensitivity	0.3PF	0.3PF	0.3PF
Supply voltage	24Vdc±20% or 115/230Vac±10%, 50/60Hz	24Vdc±20% or 115/230Vac±10%, 50/60Hz	24Vdc±20% or 115/230Vac±10%, 50/60Hz
Power consumption	Max.2W	Max.2W	Max.2W
Contact rating	3A/250Vac, DPDT	3A/250Vac, DPDT	3A/250Vac, DPDT
Delay time	0~30 sec	0~30 sec	0~30 sec
Fail safe mode	High / low Fail safe mode	High / low Fail safe mode	High / low Fail safe mode
Conduit	1/2" NPT x2 hole	1/2" NPT x2 hole	1/2" NPT x2 hole
Operation pressure	20kg/cm^2	20kg/cm^2	20kg/cm^2

Dimension (Unit:mm)	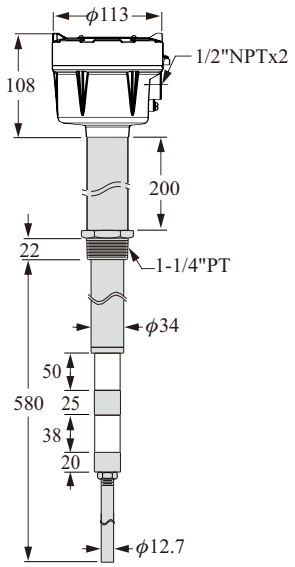	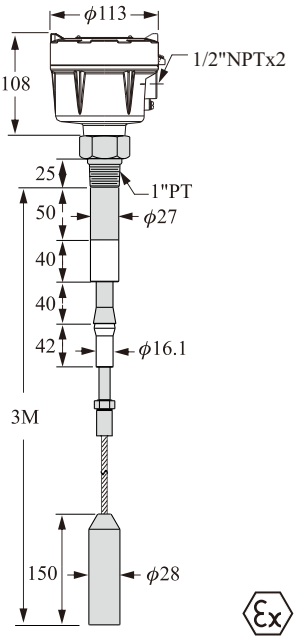	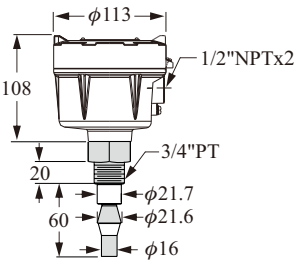
Order No.	**SB1728 [Super Hi-Temp Model]**	**SB1750 [Cable Model]**	**SB1760 [Mini Model]**
Operating temp.	-40°C~450°C	-40°C~150°C	-40°C~150°C
Ambient temp.	-20°C~70°C	-20°C~70°C	-20°C~70°C
Housing	Aluminum (IP65)	Aluminum (IP65)	Aluminum (IP65)
Probe material	SUS304 or 316	SUS304 or 316	SUS304 or 316
Insulated material	Ceramic	PTFE	PTFE
Connection	1-1/4" PT	1" PT	3/4" PT
Sensitivity	0.3PF	0.3PF	0.3PF
Supply voltage	24Vdc±20% or 115/230Vac±10%, 50/60Hz	24Vdc±20% or 115/230Vac±10%, 50/60Hz	24Vdc±20% or 115/230Vac±10%, 50/60Hz
Power consumption	Max.2W	Max.2W	Max.2W
Contact rating	3A/250Vac, DPDT	3A/250Vac, DPDT	3A/250Vac, DPDT
Delay time	0~30 sec	0~30 sec	0~30 sec
Fail safe mode	High / low Fail safe mode	High / low Fail safe mode	High / low Fail safe mode
Conduit	1/2" NPT x2 hole	1/2" NPT x2 hole	1/2" NPT x2 hole
Operation pressure	ATM	20kg/cm^2	20kg/cm^2

WIRING DIAGRAMS

DESCRIPTION OF PANEL FUNCTION

❶ Set Point: Clockwise, capacitance increases.
❷ Red LED: Power indicator.
❸ Range: Alarm setting- HI/LOW
❹ FSH/FSL switch (High/Low level failsafe)
❺ Green LED: Alarm indicator for FSH and FSL. Green LED turns off when alarm goes off.
❻ Time Delay: Alarm time delay setting up to 30 seconds.
❼ Alarm simulation testing.(SB2□□□Aseries)
❽ Relay output.
❾ Power: 115/230Vac

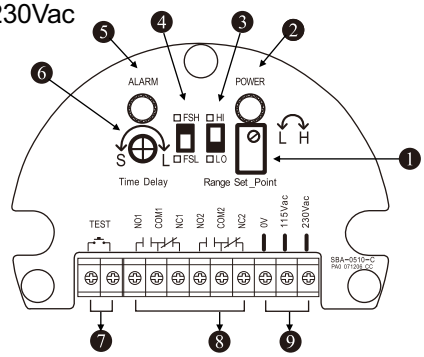

FAILSAFE ALARM

FSH high level failsafe alarm:
SB2□□□ series switch is installed at the high level point the FSH switch mode is “on”.
When the medium has no contact with the probe, the green LED lights up and relay output COM/NC is in an open state.
When the medium level reaches high level and it touches the probe (or in the case of blackout), the green LED turns off and the relay output COM/NC is closed. When the relay output COM/NC is closed, it implies the FSH alarm has been activated.

ALARM CALIBRATION

Setting for High Level Alarm
1.Switch the FSH/FSL Knob to FSH
2.Switch the Range Knob to LO.
3.Switch the Time Delay Knob to S (Minimum).
4.Decreasing the level of the medium to below the measuring probe.
5.Spinning the Set Point Knob till the Alarm LED (green light) lights up.
6.Firstly, increasing the level of the medium till it covers half of he measuring probe and the Alarm LED (green light) shut off. Secondly, spinning the Set Point Knob clockwise till Alarm LED (green light) lights up. If the Alarm LED (green light) still not lights up after spinning it till the end, please adjust the Range Switch to HI and repeat procedure 5. Thirdly, recording the numbers of turns and its angle, then switching the knob counterclockwise back for 1/2 circle and angle.
7.Adjusting the delay time for alarm (0~30 seconds): If turning the Time Delay Knob clockwise, the delay time is postponed, while turning the Time delay Knob counterclockwise, the delay time is shorten.

DESCRIPTION OF PANEL FUNCTION

❶ Set Point: Clockwise, capacitance increases.
❷ Red LED: Power indicator.
❸ Range: Alarm setting- HI/LOW
❹ FSH/FSL switch (High/Low level failsafe)
❺ Green LED: Alarm indicator for FSH and FSL. Green LED turns off when alarm goes off.
❻ Time Delay: Alarm time delay setting up to 30 seconds.
❼ Alarm simulation testing.(SB2□□□B series)
❽ Relay output.
❾ Power: 24Vdc.

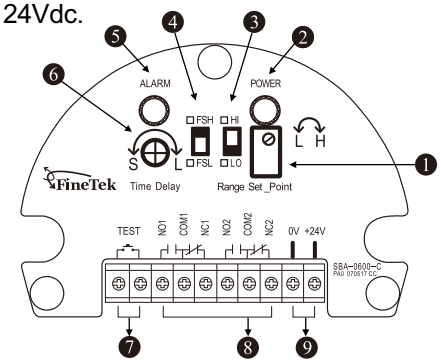

FSL low level failsafe alarm:
SB2□□□ series switch is installed at the low level, the FSL mode is “on”.
When the medium touches the probe the green LED lights up and the relay output COM/NC is in an open state.
When the medium level drops below the low level and the medium does not have contact with the probe (or in the case of blackouts), the green LED turns off and relay output COM/NC is closed.
When relay output COM/NC is closed, it implies the FSL alarm has been activated.

Setting for Low Level Alarm
1. Move the FSH/FSL button to FSL.
2. Move the ‘range’ button to LO.
3. Turn the ‘time delay’ knob to S (Minimum).
4. Lower the level of the medium to cover half of the measuring probe.
5. Turn the ‘set point’ screw counterclockwise till the Alarm LED lights up. If the LED hasn’t lit up after turning it fully to the end, please adjust the ‘range’ button to HI and repeat procedure 5.
6. Now, decrease the level of the medium until it is below the measuring probe and the Alarm LED has turned off.
   Next, turn the ‘set point’ screw counterclockwise until the Alarm LED (green light) lights up [Recording the numbers of turns you make]. Finally, turn back the‘set point’ screw clockwise for 1/2 circle.
7. Adjust the delay time for the alarm (0~30 seconds): When turning the ‘time delay’ knob clockwise, the delay time is postponed. Turning the ‘time delay’ knob counterclockwise, the delay time will be shortened.

ORDER INFORMATION

⑤ ⑥ ⑦ ⑧ ⑨ ⑩ ⑪ ⑫ ⑬ ⑭ ⑮ ⑯ ⑰ ⑱ ⑲ ⑳ ㉑ ㉒ ㉓ ㉔

SBX1 □□□□-□□□□□□□□□□□□□□□□

⑤⑥ Model

00：Standard
02：Hi-temperation
08：Suppr Hi-temperation

⑦⑧ Certification

00：None
1C：ATEX-Exd

(Next page)

⑨ Type

A：ϕ27 + 1"PT Standard type
B：ϕ22 + 3/4"PT Standard type
C：Hi-temperation type
D：Standard L type
E：Wire probe type
F：Mini type

⑩ Power supply

A：AC115V/230VAC ±10%, 50/60 Hz(Analog alarm function)
B：24VDC ±20%, 50/60 Hz(Analog alarm function)
C：AC115/230VAC ±10%, 50/60 Hz
D：24VDC ±20%

Connection

⑪⑫	⑬⑭	⑮⑯
Flang item	A7：3/4"	01：PT male
AK：JIS-FF	A8：1"	03：PF male
AN：ANSI-RF	B1：1-1/2"	07：NPT male
AS：DIN-FF	B2：2"	40：5 kg/cm^2
	B4：2-1/2"	42：10 kg/cm^2
Thread item	D7：DN20	48：150 Lbs
AC：ANSI	D8：DN25	49：300 Lbs
AA：JIS	D9：DN32	57：PN10
	E1：DN40	58：PN16
	E2：DN50	
	E3：DN65	

ORDER INFORMATION

⑤ ⑥ ⑦ ⑧ ⑨ ⑩ ⑪ ⑫ ⑬ ⑭ ⑮ ⑯ ⑰ ⑱ ⑲ ⑳ ㉑ ㉒ ㉓ ㉔

SBX1 □□□□-□□□□□□□□□□□□□□□□

⑰⑱ Probe material

MA: SUS 304
MB: SUS 316
MC: SUS 316L

⑲⑳ Insulated material

13: PEEK
21: PTFE
32: Ceramics

㉑㉒㉓㉔ Length

Code	Probe Length
0060~3000	0060~3000mm