Feedback Connectors

PIN	FUNCTION
1	Up(5V)
2	Un(0V)
3	A
4	/A
5	B
6	/B
7	PTC1(+)
8	PTC2(-)
9	U
10	/U
11	V
12	/V
13	n.c.
14	N
15	/N
16	W
17	/W

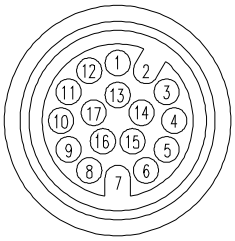

M17 17 PIN

CONNECTORS VIEWED FROM CUSTOMER SIDE

5 SMH60 Technical Information

5.1 Technical Data

Motor Type		SMH60—203028RNL SMH60—203028ENL SMH60—203028ENC SMH60—203028RNC	SMH60—403028RNL SMH60—403028ENL SMH60—403028ENC SMH60—403028RNC
U_{dc} （DC Link）		300	300
Continuous characteristics	Rated power P_N (W)	200	400
	Rated torque T_N (Nm)	0.64	1.27
	Rated speed n_N (rpm)	3000	3000
	Rated current I_N (A)	1.3	2.4
Moment maximum torque T_m (Nm)		1.92	3.82
Continuous static torque T_s (Nm)		0.7	1.39
Continuous static current I_s (A)		1.43	2.45

Resistance line-line R_L (Ω)	9.25	4.01
Inductance line-line L_L (m H)	20.95	9.81
Electrical time constant τ e (ms)	2.78	3.18
Mechanical time constant τ m (ms)	2.469	1.48
Voltage constant K_e (V/K rpm)	31	31
Torque constant K_t (Nm/A)	0.512	0.512
Rotor polar moment of inertia J_m (Kg • cm^2)	0.375	0.51
The maximum allowable d_u/d_t (KV/μs)	8	8
Insulation class	F	F
Feed back device	2500p/rev incremental encoder or Resolver (sin--cos)	
Cooling method and protection level	Fully-closed，self-cooling；IP65（out shaft cover IP54）	
The operating of Environmental conditions	Temperature	-20℃～40℃（No freeze）
	Humidity	Below 90%RH（No dewing）
	Environment	Far away active gas,combustible gas, oil drop,ash.
	Installation of height	The highest altitude is 4000m， from 1000m altitude, The power will be decreased 1.5% at every 100m higher

5.2 Product Dimension Drawing

5.2.1 SMH60（Fit M17）Series Dimension

unit：mm

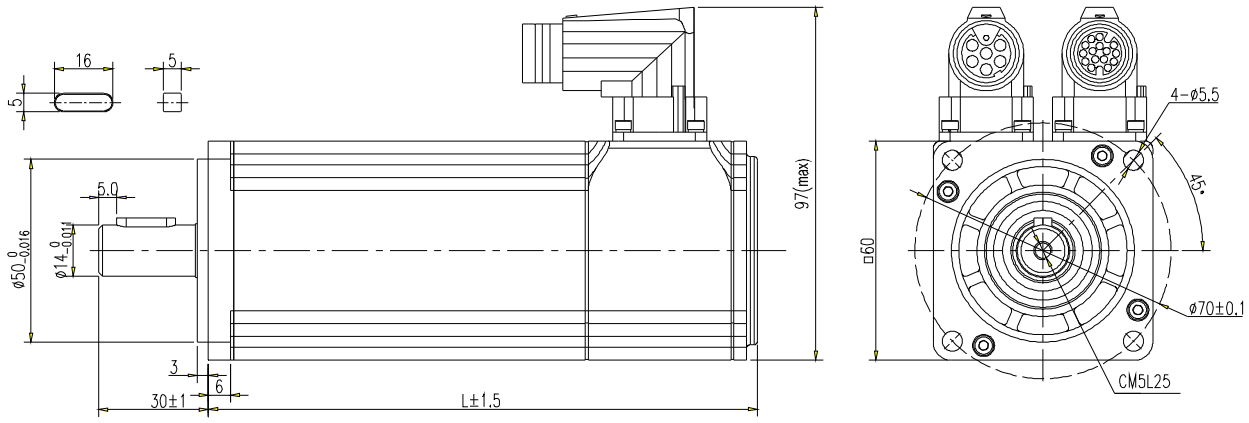

SMH60 Series（Fit M17） Length （Unit：mm）

L / Power(W）	No Brake	Brake
200	120	165
400	150	195

5.2.2 SMH60（Lead Line）Series Dimension

unit：mm

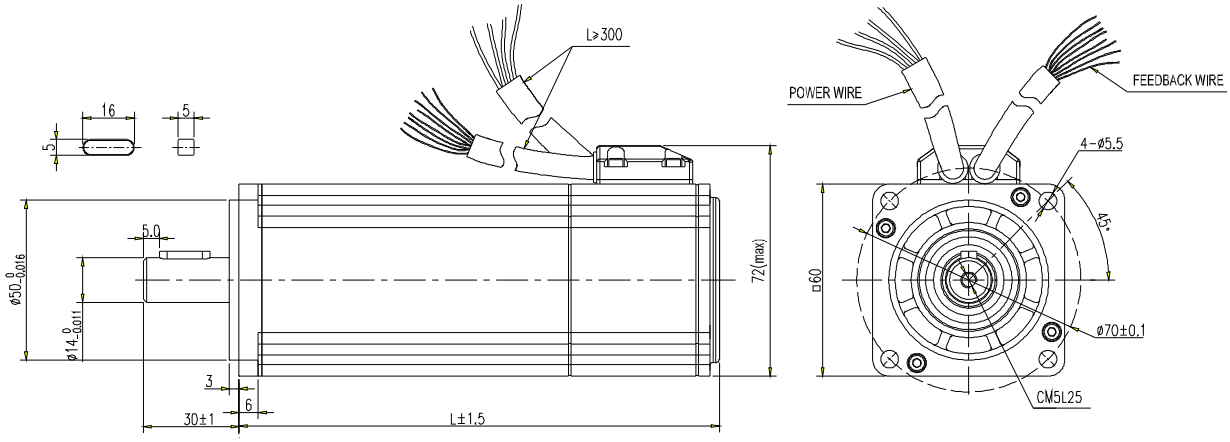

SMH60 Series（Lead Line） Length （Unit：mm）

L / Power(W)	No Brake		Brake	
	Fit Encoder	Fit Resolver	Fit Encoder	Fit Resolver
200	120	115	159	154
400	150	145	189	184

5.3 SMH60 Series Performance Curve

SMH60-203028ENC SMH60-203028EBC SMH60-203028RNC SMH60-203028RBC

SMH60-203028ENL SMH60-203028EBL SMH60-203028RNL SMH60-203028RBL

Speed—Torque Performance Curve

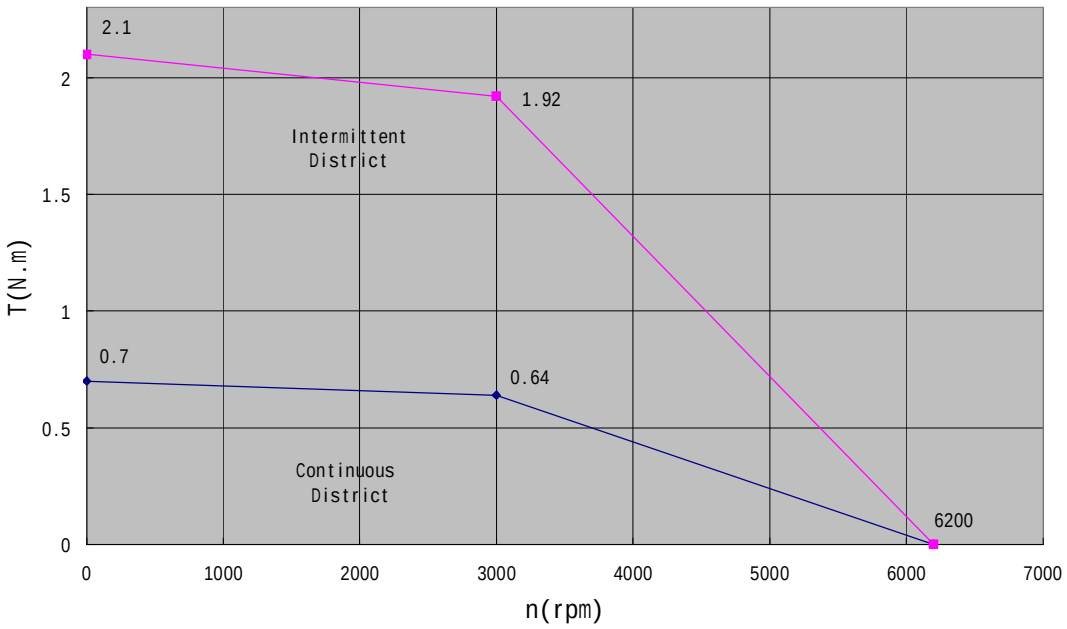

SMH60-403028ENC SMH60-403028EBC SMH60-403028RNC SMH60-403028RBC
SMH60-403028ENL SMH60-403028EBL SMH60-403028RNL SMH60-403028RBL

Speed—Torque Performance Curve

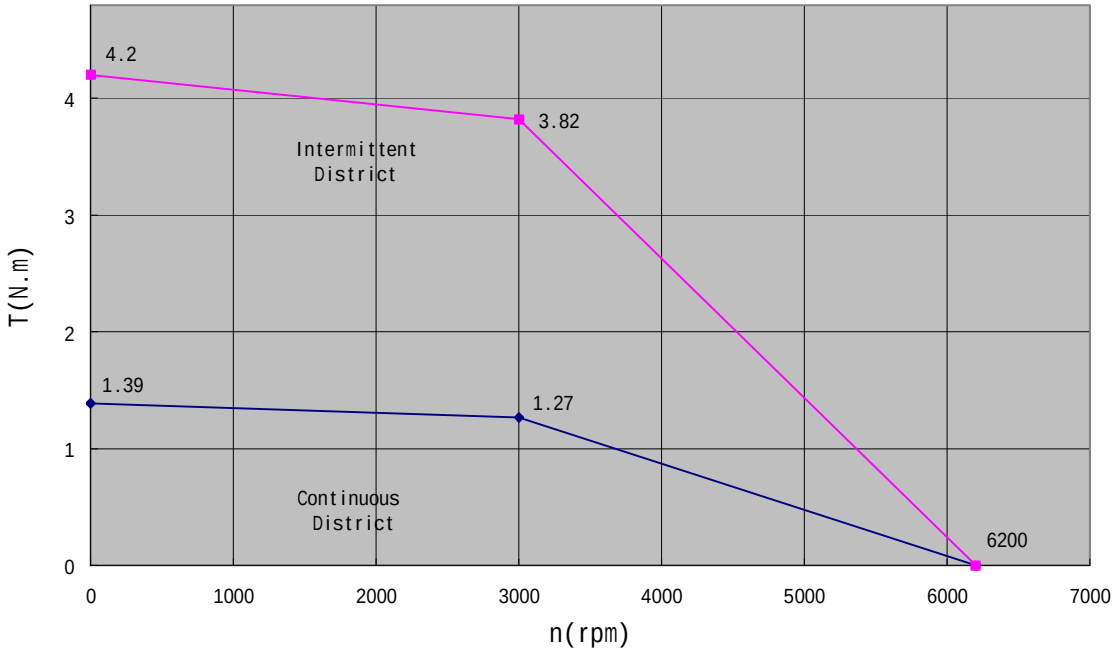

5.4 SMH60 Motor radial force at the shaft end

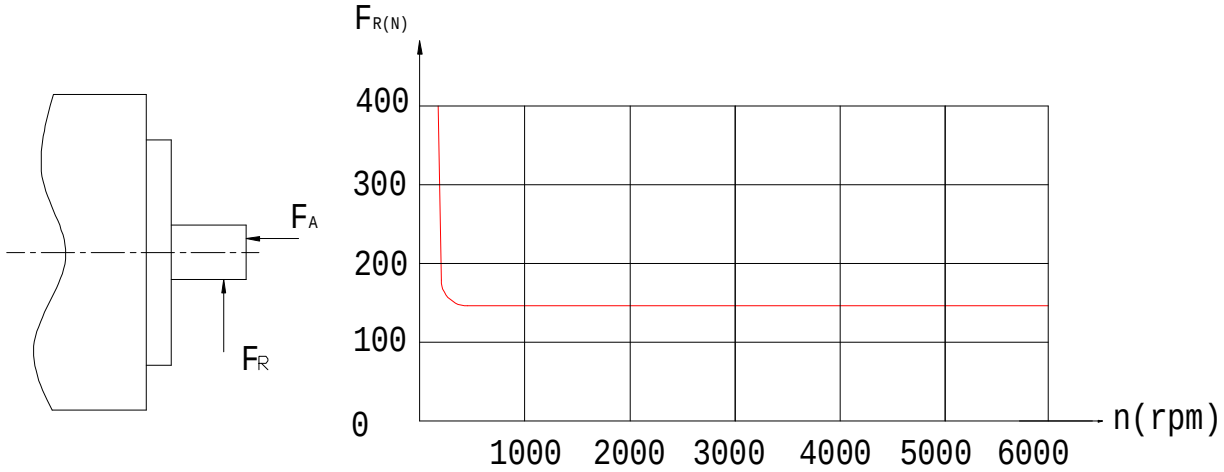

SMH80 Technical Information

6.1 Technical Data

Motor Type	SMH80—753028RNL SMH80—753028ENL SMH8—753028ENC SMH80—753028RNC	SMH80—1003028RNL SMH80—1003028ENL SMH8—1003028ENC SMH80—1003028RNC	SMH80—1003028RNL -1 SMH80—1003028ENL-1 SMH80—1003028ENC-1 SMH80—1003028RNC-1
DC bus U_{dc}	300	300	300

Continuous characteristics	Rated power P_N (W)	750	1000	1000
	Rated torque T_N (Nm)	2.39	3.18	3.18
	Rated speed n_N (rpm)	3000	3000	3000
	Rated current I_N (A)	4.0	5.5	4.4
Moment maximum torque T_m (Nm)		7.17	9.48	9.48
Continuous static torque T_s (Nm)		2.63	3.3	3.3
Continuous static current I_s (A)		3.59	6.05	4.75
Resistance line-line R_L (Ω)		1.41	1.01	1.87
Inductance line-line L_L (m H)		8.66	6.7	11.2
Electrical time constant τ e (ms)		6.14	4.7	5.98
Mechanical time constant τ m (ms)		1.05	1.05	1.16
Voltage constant K_e (V/K rpm)		34	34	44
Torque constant K_t (Nm/A)		0.562	0.562	0.727
Rotor polar moment of inertia J_m (Kg・cm^2)		1.36	1.9	1.9
The maximum allowable d_u/d_t (KV/μs)		8	8	8
Insulation class		F	F	F
Feed back device		2500p/rev incremental encoder or Resolver (sin---cos)		
Cooling method and protection level		Fully-closed，self-cooling； IP65（out shaft cover IP54）		
The operating of environmental conditions	Temperature	-20℃～40℃（No freeze）		
	Humidity	Below 90%RH（No dewing）		
	Environment	Far away active gas, combustible gas, oil drop, ash.		
	Installation of height	The highest altitude is 4000m.From 1000m altitude; the power will be decreased 1.5%, at every 100m higher.		